PB 239 914

PRELIMINARY DESIGN OF A HOUSEHOLD REFUSE GRINDER

Allan T. Fisk, et al

Foster-Miller Associates, Incorporated

Prepared for:

National Environmental Research Center

April 1974

DISTRIBUTED BY:

NTIS

National Technical Information Service
U. S. DEPARTMENT OF COMMERCE
5285 Port Royal Road, Springfield Va. 22151

This document has been approved for public release and sale.

EPA-670/2-74-020
April 1974

PB 239 914

PRELIMINARY DESIGN OF A HOUSEHOLD REFUSE GRINDER

By

Allan T. Fisk and Adi R. Guzdar
Foster-Miller Associates, Inc.
Waltham, Massachusetts 02154

Program Element No. 1DB063

Project Officer

Donald A. Oberacker
Solid and Hazardous Waste Research Laboratory
National Environmental Research Center
Cincinnati, Ohio 45268

NATIONAL ENVIRONMENTAL RESEARCH CNETER
OFFICE OF RESEARCH AND DEVELOPMENT
U.S. ENVIRONMENTAL PROTECTION AGENCY
CINCINNATI, OHIO 45268

Reproduced by
NATIONAL TECHNICAL
INFORMATION SERVICE
U S Department of Commerce
Springfield VA 22151

TECHNICAL REPORT DATA
(Please read Instructions on the reverse before completing)

1. REPORT NO. EPA-670/2-74-020	2.	3. RECIPIENT'S ACCESSION NO. PB 239914
4. TITLE AND SUBTITLE PRELIMINARY DESIGN OF A HOUSEHOLD REFUSE GRINDER		5. REPORT DATE April 1974-Issuing Date
		6. PERFORMING ORGANIZATION CODE
7. AUTHOR(S) Allan T. Fisk and Adi R. Guzdar		8. PERFORMING ORGANIZATION REPORT NO.
9. PERFORMING ORGANIZATION NAME AND ADDRESS Foster-Miller Associates, Inc. 135 Second Avenue Waltham, Massaxhusetts 02154		10. PROGRAM ELEMENT NO. 1DB063;ROAP 09ADA;Task 03
		11. CONTRACT/GRANT NO. 68-03-0095 (CPE-70-115)
12. SPONSORING AGENCY NAME AND ADDRESS National Environmental Research Center Office of Research and Development U.S. Environmental Protection Agency Cincinnati, Ohio 45268		13. TYPE OF REPORT AND PERIOD COVERED Final
		14. SPONSORING AGENCY CODE

15. SUPPLEMENTARY NOTES

16. ABSTRACT

The grinder developed during this study reduces most of the components of household refuse into a slurry formed with the nonfecal component of household water and transports it through the house sewer lateral to the sewer. The system requires a modification in household plumbing and a storage tank to separate and store the nonfecal component of waste water. The grinder design as conceived would be capable of grinding most of the components of household refuse. The grinder design will accept heavy aluminem and steel cans without damage to the machine, but will not grind them. It will clean the cans of putrescible matter and more than likely crumple them to a smaller volume. Simplicity of design, jam free operation, and lost cost were achieved within power limitations. Economic analysis of grinder and plumbing modifications are discussed.

PRICES SUBJECT TO CHANGE

17. KEY WORDS AND DOCUMENT ANALYSIS

a. DESCRIPTORS	b. IDENTIFIERS/OPEN ENDED TERMS	c. COSATI Field/Group
*Refuse, *Sanitary sewers, Design, Grinders, Disposal, Economics	*Household waste, *Grinder design, Solid waste, Solid waste management, Solid waste disposal	13B

18. DISTRIBUTION STATEMENT Release to Public	19. SECURITY CLASS (This Report) UNCLASSIFIED	21. NO. OF PAGES 146
	20. SECURITY CLASS (This page) UNCLASSIFIED	

EPA Form 2220-1 (9-73)

REVIEW NOTICE

The National Environmental Research Center--Cincinnati has reviewed this report and approved its publication. Approval does not signify that the contents necessarily reflect the views and policies of the U.S. Environmental Protection Agency, nor does mention of trade names of commercial products constitute endorsement or recommendation for use.

FOREWORD

Man and his environment must be protected from the adverse effects of pesticides, radiation, noise and other forms of pollution, and the unwise management of solid waste. waste. Efforts to protect the environment require a focus that recognizes the interplay between the components of our physical environment--air, water, and land. The National Environmental Research Centers provide this multidiciplinary focus through programs engaged in

> studies on the effects of environmental contaminants on man and the biosphere, and
>
> a search for ways to prevent contamination andto recycle valuable resources.

As part of these activities, the study described here presents a preliminary design for a sungle family hausehold refuse grinder developed to evaluate the technical feasibility of transporting ground household refuse through existing sewers.

A. W. Breidenbach, Ph.D.
Director
National Environmental
Research Center, Cincinnati

ABSTRACT

A preliminary design for a single family household refuse grinder was developed during this program as part of an overall study to evaluate the technical feasibility of transporting ground household refuse through existing sewers. In the system under consideration, the grinder reduces most of the components of household refuse into a slurry formed with the non-fecal component of household water and transports it through the house sewer lateral to the sewer where it is mixed with the rest of the water. The system requires a modification in household plumbing and a storage tank to separate and store the non-fecal component of waste water.

The grinder design as conceived would be capable of grinding most of the components of household refuse, such as, paper, cardboard, plastics, cloth, glass, lightweight aluminum and garbage. The grinder design will accept heavy aluminum and steel cans without damage to the machine, but not grind them. It will clean the cans of putrescible matter and more than likely crumple them to a smaller volume.

Simplicity of design, jam free operation, and low cost were achieved within the maximum power limitations of available electrical household service by careful design which allows for a responsible machine-user interaction. The grinder design parallels the design of most electrical home appliances in order to maximize user acceptability.

Typical estimated costs are, $780 dollars for the grinder and water supply system, 200 to 500 dollars for the modification of new construction and 500 to 1200 dollars for the modification of existing homes. The annual cost of the system, including depreciation and maintenance is estimated to be in the range of 70 to 115 dollars.

TABLE OF CONTENTS

	Page No.
ABSTRACT	i
LIST OF ILLUSTRATIONS	vi
LIST OF TABLES	viii
SUMMARY	ix
General	ix
System Description	x
Grinder Design	xiii
Cost	xiv
Recommendations	xvi
CHAPTER 1 - INTRODUCTION	1
Objective	4
Scope of Program	5
CHAPTER 2 - LITERATURE REVIEW	7
Introduction	7
Characteristics of Domestic Refuse and Estimated Refuse Concentrations in Sewage	7
Municipal Sewers for Transport of Ground Domestic Refuse	12
Feasibility of Flow of Ground Refuse Slurry Through Inclined Sewer Pipes - Phase I Results[3]	17
CHAPTER 3 - DESIGN CONSIDERATIONS FOR A HOUSEHOLD REFUSE GRINDER	21
Introduction	21
Functional Specifications	22
Interactions Between the Household Refuse Grinder and the User	25

TABLE OF CONTENTS (CONT.)

	Page No.
Grinder Interfacing with Adjacent Equipment	29
Optimizing Functional Performance	30
Summary of System Specifications	31
CHAPTER 4 - METHODS OF SIZE REDUCTION	35
Classification of Size Reduction Processes	35
Description of Commercially Available Size Reduction Equipment	37
CHAPTER 5 - SELECTION AND EVALUATION OF GRINDER DESIGNS	53
Hydropulpers	53
Disk Mills	58
Garbage Grinder-Pulper	62
CHAPTER 6 - PRELIMINARY DESIGN OF HOUSEHOLD REFUSE GRINDER	77
System Description	77
Grinder Design	82
Pump Flow Rate and Tank Capacity	89
Forming and Discharging the Slurry	90
Safety Provisions and Interlocks	91
Operating Sequence	95
System Installation	97
CHAPTER 7 - GRINDER AND SYSTEM COST ESTIMATES	99
Cost Estimate for Grinder, Water Storage, Delivery and Unit Installation	99
Cost Estimate for House Modification	101
Maintenance Costs	104
Cost Summary	105

TABLE OF CONTENTS (CONT.)

	Page No.
CHAPTER 8 - ALTERNATE HOUSEHOLD CONFIGURATIONS AND GRINDER DESIGNS	107
Packaged Installation	107
Universal Household Refuse Grinder	109
CHAPTER 9 - CONCLUSIONS AND RECOMMENDATIONS	114
Conclusions	114
Recommendations	118
References	120
APPENDIX A - LIST OF MANUFACTURES CONTACTED	122
ACKNOWLEDGEMENT	124

LIST OF ILLUSTRATIONS

Figure No.		Page No.
1	Typical Grinder System Configuration, Basement Installation.	32
2	Typical Hammermill Configuration.	39
3	Typical Shredder or Cutter.	41
4	Crushers.	43
5	Cage Disintegrator.	44
6	Rasp Mill.	46
7	Disk Mill.	47
8	Somat and Black-Clawson Pulper.	49
9	Dorr-Oliver Gorator.	57
10	Beloit-Jones Shredmaster.	59
11	Grinding Chamber of Taylor Stiles Disposer.	64
12	Test Arrangement of Taylor Stiles Disposer.	66
13	Ground (and drained) Refuse from Taylor Stiles Disposer.	70
14	Segregated Grinds from Taylor Stiles Disposer.	71
15	Cloth and Rags Ground in Taylor Stiles Disposer.	72
16	Aluminum Beer Cans Ground in Taylor Stiles Disposer.	73
17	Steel and Heavy Plastic Not Grindable in Taylor Stiles Disposer.	74
18	Typical Grinder System Configuration, Basement Installation.	78
19	Preliminary Household Grinder Design.	83
20	Shredder Ring/Breaker Bar Interface.	85

LIST OF ILLUSTRATIONS (CONT.)

Figure No.		Page No.
21	Outdoor "Package System."	108
22	Possible High Power Grinder Design.	111

LIST OF TABLES

Table No.		Page No.
1	Some Daily Per Capita Solid Waste Outputs	8
2	Estimate of Components of Domestic Refuse in Santa Clara County, California (1967)[1]	10
3	Composition and Analysis of Composite Municipal Refuse (1966)[1]	11
4	Physical Characteristics of Refuse	23
5	Classification of Size Reduction Methods	38
6	Taylor-Stiles Disposer Performance	68
7	Specifications of a Proposed Household Refuse Grinding System	79
8	Estimated Manufacturers Cost of Proposed Refuse Grinder System	100
9	Estimated House Modification Costs for a Typical Proposed Residential Refuse Grinding System	102
10	Estimated Installed System Price and Annual Cost	106

SUMMARY

General

This program represents Phase II of contract CPE-70-115 conducted for the Office of Research and Monitoring, Solid Waste Research Laboratory, Cincinnati, Ohio, Environmental Protection Agency. The overall objective of the program is to evaluate the technical feasibility of a household refuse grinding system including hydraulic transport of ground household refuse through existing sewer lines, and treating the sewage containing ground refuse at the treatment plant. The feasibility of transport through straight sewer pipe sections and that of treatment at the sewage plant was evaluated during Phase I^3 of this contract. The concept was shown to be promising at the laboratory level and certain areas were identified as critical and requiring larger scale system testing. The economic feasibility of the concept of hydraulic transport of ground refuse is presently being investigated by Curran Associates, Northampton, Massachusetts under a separate contract from the National Environmental Research Center, Cincinnati, Ohio.

From the results of the transport studies a set of specifications were developed for a suitable household refuse grinder, including type of refuse to be ground, particle size and slurry concentration. Phase II of this program was aimed at developing

a preliminary design of a household refuse grinding system to meet the grinder specifications developed in Phase I. A summary of this design development follows.

System Description

A household refuse grinder installation in a typical single family dwelling consists of a grinder located most conveniently in the basement, an internal water storage tank to store the non-fecal water produced in the household, plumbing to separate the non-fecal water and transfer it into the storage tank, a pump to supply the water at a predetermined rate to the grinder for grinding and forming a slurry and the necessary plumbing for transferring the slurry to the sewer. As required under the terms of the contract, separation and storage of the non-fecal water has been included for the purpose of eliminating possible contact between persons using the equipment and water containing fecal matter. The fecal carrying water is added downstream of the grinding equipment in order to dilute the slurry to the required solids concentration. The proposed concept would result in practically no increase in the use of fresh water and thus conserve water use.

The system is designed to operate on a batch basis and is capable of grinding the average daily production of household refuse. The storage tank is sized to collect the quantity of non-fecal water required to produce the specified ground

refuse slurry concentration with a full load of household refuse to be ground.

In a typical operation of the system, the householder would collect all the trash and garbage produced in the whole house on a daily basis, and throw it into the hopper of the grinder. He would then check that the storage tank contained an adequate supply of water for the quantity of refuse in the grinder, set a simple dial to an appropriate load setting, much like a clothes washer, close the lid and turn a handle to lock the lid and turn the system on. This would start the pump and the grinder, reducing the refuse to a slurry, which would flow out to the sewer line under gravity.

The grinder must be capable of grinding most of the components of household refuse, such as paper, cardboard, plastics, cloth, glass, lightweight aluminum, and garbage, items which constitute the bulk of household refuse. The statement of the work of the present contract indicated that the grinding of steel cans was not an essential requirement of the system under evaluation. However, the extra penalties in associated cost, overall system complexity and reliability were to be identified.

Results of Phase I of this program show that ideal hydraulic transport and separation are achieved when the particle size of the light components of refuse, such as, paper, plastics, cloth etc., is less than 1 inch with a minimum of fines and 3/8 inch for the heavy components such as glass and metal. The ground

refuse slurry flowing into the sewer from the grinder should have a maximum solids concentration of 1.5 percent by weight, with a 1 percent maximum preferred. The cost of the grinder should be such as to make it competitive with the other more conventional means of refuse collection.

A review of commercially available size reduction equipment and the associated experience of grinding mixed refuse, i.e., components ranging in hardness from paper to glass and steel, stressed the need for a considerable degree of user-machine interaction to increase the reliability of operation. A minimum amount of presorting to remove hard-to-grind materials is considered essential in order to significantly increase the reliability of operation. To exploit this user-machine interaction and to ensure maximum acceptability, the grinder design was made to parallel the design of large household appliances, such as washing machines, clothes driers, etc. Controls and operating procedures were designed to fully utilize the homeowners' experience and respect for the operation of such electromechanical devices. Operating safety and tamper proof design were considered to be of the utmost importance.

Batch type operation, where the operator collects and grinds a day's refuse was considered desirable. A full load capacity of 20 gallons (corresponding to approximately 12 pounds of refuse) and a cycle time of 12 minutes was selected. These objectives had to be achieved with a maximum power rating

of approximately 2 horsepower which is considered to be a maximum for household electric service.

Grinder Design

The design configuration was selected based on an evaluation of available grinding experience with the various commercially available units on mixed refuse and the results of a limited test program. Simplicity of design, jam free operation, maximum power limited by available electrical household service, and low cost were the principal factors governing the design.

The grinding mechanism selected is a high speed, high clearance shear with no meshing parts. It consists of an impeller and a breaker bar rotating past a slotted shredder ring. Suitable slanting of the slots and the breaker bar provides an efficient scissor-like shearing action. This is expected to minimize power consumption and allow the use of a 2 HP motor. Further, the large included angle, 60 degrees or more, between the hardened bar and ring would tend to reject upwards any hard items too difficult to shear, thus reducing the possibility of jams.

The grinder is capable of grinding all refuse components except heavy aluminum, steel cans and tough ductile plastics. The grinder design will accept the heavy aluminum and steel cans without any danger of damage to the machine. It will clean the cans of any putrescible matter and more than likely crumple them to a smaller volume. Thus the machine would

aid the homeowner in preparing the cans for recycling or ultimate disposal. A grinder design capable of grinding all the components of household refuse, including steel cans would be high powered and expensive. It is estimated that 5-7 1/2 HP would be required to grind steel cans, and this would result in a selling price increase on the order of $300 - $400. Further, the design would be susceptible to jams, breakage, and high maintenance costs.

The system requires special modifications to the household plumbing to separate and store the non-fecal water. A 300 gallon storage tank is provided. This tank and flow rate through the grinder have been sized to achieve a 1 percent slurry concentration in the flow from the house to the sewer. This design is extremely conservative. It is our present opinion that higher concentrations of 2 percent and possibly higher, could be accommodated by the interconnector between the house and the sewer. Such an increased concentration would make the connector pipe flow fuller than normal and at a lower velocity. This is unlikely to cause any problems, as the flow is intermittent and at these high concentrations the slurry is non-settling.

Cost

The capital cost of the total system includes the grinder

cost, the water supply and storage tank cost and the cost for house modifications to separate the fecal and non-fecal water. The cost to the consumer of the grinder and the water supply system is estimated to be 780 dollars in production quantities. The cost of house modifications is a strong function of the type and age of house. It can range from 200 to 500 dollars for new construction and 500 to 1200 dollars for existing homes. The high cost of house modifications, especially for existing homes would strongly favor the applicability of the system to new construction.

The annual cost of the system, including depreciation and maintenance is estimated to be in the range of 70 to 115 dollars, depending on the type of house construction. This is high when directly compared with the $50 to $70 annual cost for conventional pick up. However, the two systems are not equivalent and therefore not comparable. No attempt has been made here to determine the dollar savings that would result from the overall labor reduction of the grinder-sewer system, nor has a value been placed on the recoverable or reusable waste. An economic study of the total system is required. Such a study is presently in progress at Curran Associates, Northampton, Mass. under a separate EPA contract. The results of this study should provide a more realistic economic evaluation of the concept of household refuse grinding and transport through sewers.

Recommendations

The logical next step to any preliminary design is a prototype design and development program. We recommend that such a program be undertaken to design, fabricate and test on a laboratory scale the proposed household refuse grinder design. Simplification in design has been achieved on the basis of a responsible relationship between the user and the machine. This design basis needs verification. Larger, multifamily grinder designs, such as presently under investigation at Curran Associates, would tend to be larger in size, more conventional in design and probably less satisfactory in operation because of a lack of direct user-machine responsibility. Most of the refuse grinding experience available to date has been on large grinding units working on municipal or institutional waste. This has generally been unsatisfactory and has led to an industry belief that a small household refuse grinder is impractical. A laboratory test program to evaluate the performance of the proposed grinder design philosophy is strongly recommended. Such a test program would allow us to investigate the effect of slurry concentration on grinding and transport of the higher concentration slurry through the interconnector between the house and the sewer. This could have a valuable input to the question of overall water storage and fresh water supply under consideration by Curran Associates in their on going study.

Subsequent to the demonstration of laboratory prototype performance, evaluation of the technical feasibility of the flow of ground refuse slurry through bends, man holes and sewer appurtenances, and the demonstration of economic feasibility by the Curran Associates study we recommend that the technical feasibility of the overall system be demonstrated in a typical small community, preferably new.

CHAPTER 1

INTRODUCTION

The urban generation of solid waste is about 7 pounds per capita per day or 256 million tons per year.[1] Solid waste collection, transportation and disposal is a 5 billion dollar a year industry of which 75 percent of the total cost can be attributed to collection and transportation. Most existing methods of solid waste disposal utilize trucks for collection and transport to either incinerators or city dumps for landfill operations. Except for the introduction of the modern day sanitary packer truck there has been no significant improvement in collection and transportation methods, although recent projects have attempted to reduce the labor intensiveness of the problem with one man collection systems, computerized routing of solid waste collection vehicles, and the like. Curbside collection of domestic refuse from trash cans remains an unsightly and unhygienic operation.

The average householder pays between $50 to $70 annually for collection and transportation of household refuse and this cost is constantly increasing. Labor is the most expensive component of this collection cost and is expected to rise at an increasing rate, if the present trend of labor costs continues. A viable alternative to this system which is more capital and less labor intensive, is required.

The "Trash Compactor" is presently being sold for household

use. It compacts household waste into a paper bag, thus reducing its volume and producing a hygenic package of refuse. However this method still requires curbside collection and transportation of the refuse package for ultimate disposal. There is some indication that trash in this compacted state may be difficult to incinerate. The proposed "Pneumo-Slurry" system[2] for collection and transportation of solid waste utilizes pneumatic collection and transport of household waste from individual homes or apartments to a central municipal grinding facility where it is ground and mixed with water into a slurry. The slurry is pumped over long distances to its ultimate disposal site through pressure pipelines. The system requires a large capital investment in pipelines and a large grinding facility in order to make it operational.

The present trend in solid waste disposal is towards conservation, and reuse or resource recovery, as landfill sites close to metropolitan areas become harder and more expensive to come by and stricter air pollution controls are placed on incineration. Most reuse systems require the waste in a shredded or ground state. The concept of grinding the refuse at the household and transporting it hydraulically through existing sewer lines is an attractive alternative to the present collection and transportation schemes or any other systems presently being proposed. It eliminates the high labor costs, requires a minimum of additional capital investment as it uses the existing sewer network, and presents

the refuse in a ground state at a central treating facility where it could be suitably processed for ultimate disposal or reuse.

The technical feasibility of this concept depends on demonstrating first, that the ground refuse can be hydraulically transported through existing sewers without overloading them; second, that the refuse can be separated and treated at a treatment plant; and third, that a household refuse grinder can be designed, built and operated at a cost which is competitive with the cost of normal refuse collection and transportation.

A program to demonstrate the feasibility of this concept of grinding and transporting household refuse through existing sewer lines was undertaken by Foster-Miller Associates contract CPE-70-115 to the Bureau of Solid Waste Management, Environmental Control Administration, Department of Health, Education and Welfare, Cincinnati, Ohio. (Presently the Office of Research and Monitoring, Solid Waste Research Laboratory, Cincinnati, Ohio, Environmental Protection Agency.)

The technical feasibility of hydraulically transporting ground household refuse through the straight pipes of existing sewers and subsequent treatment of sewage containing ground household refuse was evaluated in Phase I of this program. The results of this feasibility evaluation are described in detail in the Phase I final report.[3] This report summarizes the results obtained during Phase II, which was concerned with the preliminary design of a household refuse grinder.

The technical feasibility of hydraulic transport of ground household refuse through sewer appurtenances is presently under evaluation by Foster-Miller Associates under contract 68-03-0095. The economic feasibility of wet transport systems for refuse is being evaluated by Curran Associates, Northampton, Massachusetts under separate contract to the EPA.

Objective

The objective of this phase of the program is to establish the preliminary design, specifications and approximate costs of a household refuse grinder. The grinder is to be designed to grind and inject into a typical sanitary sewer domestic refuse consisting of newspapers, magazines, cardboard, cellophane, glass, plastics, wood, occassional pieces of aluminum, and garbage. In addition, it was considered desirable to identify the additional grinder requirements to grind all aluminum and steel cans.

For health reasons the ground refuse is to be mixed into a slurry with the non-fecal component of household water. Adequate provisions must be made for the separation and storage of this non-fecal water for subsequent use in the grinder. The fecal-carrying water is added to the slurry downstream of the grinding equipment. The combined flows provide the necessary slurry dilution for gravity flow in the sewers. This proposed method of separation and storage permits grinder

operation and hydraulic transport with essentially no increase in fresh water consumption.

The refuse grinder system is to be designed to meet the size specifications for refuse grounds and slurry concentration developed as a result of the hydraulic studies of Phase I of this program.[3] These results show that for hydraulic transport of ground refuse through the sewer the particle size from the grinder should be less than 1 inch square for the light components of refuse, such as paper, plastics, cloth etc. and less than 3/8 inch for the heavy components, such as glass and metal. A slurry concentration of less than 1.0 percent by weight of refuse is considered desirable.

Scope of Program

The scope of this program included:

1. A literature survey of the characteristics of household refuse and the feasibility of the overall concept of hydraulic transport of ground refuse through sewers.
2. The development of design specifications for the household refuse grinder.
3. A study of the state of the art in refuse comminution.
4. Evaluation and selection of promising concepts based on available experience and limited performance tests on mixed household refuse.

5. Development of a preliminary grinder design to meet the design specifications.

6. Development of preliminary cost estimates for the grinder, water supply system and the necessary house modifications.

The subsequent chapters of this report summarize the results obtained during the course of this program. The literature review is presented in Chapter 2; the development of design considerations in Chapter 3; a review of the different methods of size reduction in Chapter 4; Chapter 5 discusses the basis for selection and evaluation of promising grinder designs; the development of the household grinder design is described in Chapter 6 with cost estimates provided in Chapter 7; Chapter 8 is devoted to the presentation of possible grinder design configurations having wider grinding capabilities than the proposed design; and finally Chapter 9 presents our conclusions and recommendations.

CHAPTER 2

LITERATURE REVIEW

Introduction

The Phase I final report[3] which summarized the results of the feasibility study, contained an extensive literature review in several pertinent areas. For the sake of completeness, portions of that literature review which have direct relevance to the grinder development are repeated here. The review includes a summary of pertinent results obtained during the experimental portions of Phase I.

Characteristics of Domestic Refuse and Estimated Refuse Concentrations in Sewage

Several publications have listed maximum, minimum, and average values of per capita, per day generation of solid wastes. A summary of the estimated average values from a number of sources is provided in Table 1. The estimated composition and analysis of domestic refuse from a typical county, such as Santa Clara County in California, is given in Table 2,[1]; and a similar classification of composite municipal refuse in Table 3. These tables show that more than 50 percent of the waste is composed of paper products.

Estimates of domestic refuse production range from 3.5 to

TABLE 1

SOME DAILY PER CAPITA SOLID WASTE OUTPUTS

	Reference	Per capita generation, pounds per day
1.	"The Dimensions of our Problem," Solid Waste Disposal Study for Lorain County, Ohio, the Regional Planning Commission, Elyria, Ohio, Report No. 15, 1969 (residential, commercial, and industrial)	7.9
2.	"Refuse Collection and Disposal," Pinellas County Public Works and Engineering Department, Pinellas County, Florida, March 1967	3.75
3.	"Quantities and Characteristics of Solid Waste," H.M. Schueller, "Elements of Solid Waste Management" Training Course Manual in Solid Wastes, U.S. Department Of Health, Education and Welfare, U.S.P.H.S., Cincinnati, Ohio, March 1968	4.5
4.	"Master Plan for Solid Waste Collection and Disposal - Tri Parish Metropolitan Area of New Orleans," U.S. Department Of Health, Education and Welfare, U.S.P.H.S., 1969	5.69
5.	"Refuse Collection Practice," Committee on Solid Wastes, APWA, 1966	5.5 (in 1980)
6.	"The Nature of Refuse," W.R. Niessen and S.H. Chansky, Proceedings of 1970 National Incinerator Conference, New York, 1970 (50-state average; for urban areas; commercial and municipal only)	6.06

TABLE 1 (Cont.)

7.	"Per Capita Figure of 5.1 Pounds of Matter Daily Indicated by National Survey" Solid Waste Management, March, 1968 (urban areas)	5.5
8.	"Results of the Solid Waste Study for the City of Chicago," Richard Suly, 60th Annual Meeting of the Air Pollution Control Association, 1967, Cleveland, Ohio (residential, commercial, and industrial)	4.5
9.	"Comprehensive Studies of Solid Wastes Management Second Annual Report," Sanitary Engineering Research Laboratory, College of Engineering and School of Public Health, University of California, Berkeley, California, SERL Report 69-1, January, 1969	19.5
10.	"Report to the New York State Pure Waters Authority on Rail-Haul Disposal of Solid Wastes for Westchester County, New York," Metcalf and Eddy Report No. 3568-1, 1969	6.8 (in 1980)
11.	"Collection, Reduction, and Disposal of Solid Waste in High-Rise Multifamily Dwellings" 2nd Interim Report. Special Advisory Committee on Solid Waste of the Building Research Advisory Board, Division of Engineering - National Research Council, for the EPA (low income apartments, no industrial or demolition waste)	2.43

TABLE 2

ESTIMATE OF COMPONENTS OF DOMESTIC REFUSE IN

SANTA CLARA COUNTY, CALIFORNIA (1967)[1]

Classification	Percent of Total	Lbs/cap/day*	Tons/year
Garbage	12	0.42	75,240
Rubbish			
paper	50	1.75	313,500
wood	2	0.07	12,540
cloth	2	0.07	12,540
rubber	1	0.04	6,270
leather	1	0.04	6,270
garden wastes	9	0.31	56,430
metals	8	0.28	50,160
plastics	1	0.04	6,270
ceramics and glass	7	0.24	43,890
nonclassified	7	0.24	43,890
TOTALS	100	3.50	627,000

* A per capita production of 8 lbs per day, of which 44 percent is domestic refuse, was assumed in estimating values.

TABLE 3

COMPOSITION AND ANALYSIS OF COMPOSITE MUNICIPAL REFUSE (1966)

	Components	Percent by Weight
1.	Corrugated paper boxes	23.38
2.	Newspaper	9.40
3.	Magazine paper	6.80
4.	Brown paper	5.57
5.	Mail	2.75
6.	Paper food cartons	2.06
7.	Tissue paper	1.98
8.	Wax cartons	0.76
9.	Plastic coated paper	0.76
10.	Vegetable food wastes	2.29
11.	Citric rinds and seeds	1.53
12.	Meat scraps, cooked	2.29
13.	Fried fats	2.29
14.	Wood	2.29
15.	Ripe tree leaves	2.29
16.	Flower garden plants	1.53
17.	Lawn grass, green	1.53
18.	Evergreens	1.53
19.	Plastics	0.76
20.	Rags	0.76
21.	Leather goods	0.38
22.	Rubber composition	0.38
23.	Paint and oils	0.76
24.	Vacuum cleaner catch	0.76
25.	Dirt	1.53
26.	Metals	6.85
27.	Glass, ceramics, ash	7.73
28.	Adjusted moisture	9.05
	TOTAL	100.00

19.5 pounds per capita per day. The 19.5 pound estimate of the University of California,[4] based on a nine-county San Francisco Bay area, is considered to be extremely high and unrepresentative of domestic refuse. It include 4 pounds per capita per day of agricultural wastes and construction and demolition materials alone account for 28 percent of the total solid waste generation. The average household waste output alone ranged from 2 to 11 pounds per capita per day. The range stated is believed to be too wide, in view of the other reference material cited. The consensus of the many references cited was that the daily generation of refuse in an urban area is about 5 pounds per capita.

An average value of total water consumption, or sewage flow, of 100 gallons per capita per day (gpcd) is generally accepted as being the minimal value in an urban area. This flow rate of 100 gpcd and refuse consumption of 5 pounds per capita per day represents a refuse concentration of 0.6 percent by weight in sewage. High side estimates of refuse concentration of 1 percent based on the national average for 1968, 2.3 percent based on the University of California, and 6.5 percent based on the estimated load factor for the year 2000 of 2.7, are possible but appear to be unrealistic.

Municipal Sewers for Transport of Ground Domestic Refuse

The concept of using existing municipal sewers for the

transport of ground household refuse has been proposed by Nebiker and Meier.[5] The concept offers a number of attractive advantages in comparison with conventional methods of street collection. It eliminates the need for any large new capital investments for the transport system, as would be required with the concept of pressurized pipeline transport of ground refuse, where new pipelines would have to be installed. The advantages cited in its favor are:

1. Aesthetic benefits of a renovated habitat
2. Improved environmental hygine
3. Capital intensive versus more conventional labor intensive systems, thus minimizing labor costs and ensuring a more stable and less inflationary collection system
4. Elimination of operator accident hazards associated with conventional collection systems
5. Lowering of street-cleaning expenses
6. Reduction in traffic congestion by collection vehicles
7. Reduction in sidewalk and alley restrictions by elimination of cans
8. Possible elimination of kitchen garbage grinders
9. Free slum areas of the stigma of being breeding grounds for disease, filth and squalor
10. Eliminate household incinerators and minimize air pollution

11. Supply household refuse in a ground state at a central facility for waste recycling.

Based upon their calculations, a 2 percent slurry would be used and the daily water consumption would increase about 6 gcd (gallons per capita per day).

An estimate was made on the yearly household cost using various disposal methods. The most expensive was $119 for the ground refuse-sewage system. However, this cost does not include the monetary value of the benefits cited above. They must be considered in order to be objective.

The authors felt very strongly that ground refuse in sewerage systems would only function in a separate sewer system because of the discharge of untreated combined waste. Where combined sewers are used, serious thought would have to be given to the separation of sewers from drains.

New emphasis would have to be placed upon screening. Primary and secondary treatment facilities would have to be enlarged. Consideration would, of necessity, be given to the large amount of paper in the sewage. Digestion and filtration were two methods mentioned as possible paper-handling processes. Finally, the authors stated that the nutrient requirements would not be affected by the ground refuse concentration.

The Los Angeles County Sanitation Districts has conducted several studies during the past decade involving the

practicability of a ground refuse-sewage mixture. These studies involved both laboratory work and actual application.

In 1963,[6] it placed 7.3 tons of ground refuse in a sewer within one-half hour. This was to simulate a municipal grinding station discharging a slug of ground refuse to the sewer. The refuse consisted of coarsely ground, unscreened material and contained large rags and other large objects. Downstream monitoring indicated that the solids in suspension did not tend to settle out and that very little floated to the surface. There seemed to be no trouble caused at inverted siphons.

At the treatment plant, it was found that the Sulzer disintegrators in front of the bar screens clogged many times. The same thing occurred at the bar screens. The statement was made that had the refuse been ground and screened sufficiently, clogging would not have occurred.

Examination at various points within the plant indicated that most of the refuse was removed as settled sludge in the primary clarifiers; the sludge was pumped to the digesters. A solids balance was made resulting in figures that showed approximately 9,500 cubic feet of gas produced for every ton of refuse received at the treatment plant.

An economic evaluation of this system showed that it would be competitive with a transfer station with a haul distance of 15 miles or more.

Other considerations cited were; dissolved solids in the plant effluent which would be significant if reuse were

a possibility, increased power requirements due to increased BOD (biochemical oxygen demand) loadings, the production of salvage material which would decrease operating costs and fertilizer which would decrease prices thus flooding the market, and the fact that only domestic refuse would be suitable for this type of operation.

In 1965 tests were conducted to determine settling characteristics and changes in solids and organic content. The addition of ground refuse was found to increase the solids and organic loading significantly. At a concentration of about 1.5 percent, a thick slurry was formed and it was felt that slurries of such high concentrations could cause problems in sewers, siphons, and pumping stations.

Sedimentation tests indicated that solids settle readily in a primary clarifier. Mixing did not seem to affect floating material. Sedimentation was found to have reduced suspended solids by greater than 95 percent and the increase in BOD due to ground refuse addition by 65 to 90 percent.

The report stated that the single most important factor that would determine the practicability of grinding refuse and discharging it to the sewers is the large amount of sludge produced.

The effluent from a treatment plant which would remove ground refuse would show an increase in suspended solids, dissolved solids, and BOD. Such increases would pose certain problems should reuse of wastewater be given consideration as a source of water supply.

In 1967,[8] another series of tests using ground refuse in sewage was conducted. Unwetted ground refuse was discharged into a 78-inch diameter pipe flowing nearly full.

The first series involved coarsely ground refuse and the second involved refuse of two-inch maximum size. Glass and metals were removed before grinding. In neither case did any stoppage occur. Very little material was seen floating.

Feasibility of Flow of Ground Refuse Slurry Through Inclined Sewer Pipes - Phase I Results[3]

A major part of the effort during Phase I of this program was devoted to studying the hydraulic flow characteristics of ground refuse slurries through the straight sections of inclined sewer pipes. The results of this study form the basis for developing the specifications for the household refuse grinder.

The hydraulic flow studies were designed to study the effects of pipe roughness, refuse type, refuse concentration, and flow rate. Glass, Transite and corrugated aluminum sewer pipes were tested. A variety of different types of ground refuse was simulated by grinding synthetic and domestic refuse through a hammermill, a Wascon hydropulper, and a Wascon hydropulper Dorr-Oliver Gorator combination.

The study showed that based on the average per capita consumption of water and generation of refuse the average refuse concentration of the slurry in a sewer is estimated

to be 0.5 percent. At this concentration, the friction head loss for the flow of ground refuse slurry through both smooth, such as glass and Transite, and rough corrugated aluminum pipes is equal to or, if anything, less than that with clear water. Sewers normally flowing half-full with water can transport a maximum refuse concentration of 1 percent through smooth pipes and 0.8 percent through rough pipes, without experiencing any change in flow behavior. When flowing at full capacity, these concentration limits can be as high as 1.5 percent before any overloading of the sewer capacity will occur. These limiting concentration values are 2 to 3 times the average concentration anticipated in the sewer line. Thus it was concluded that the 0.5 percent ground refuse slurry would flow similar to clear water and that the transport of such slurries through existing sewers is feasible.

At higher concentrations, approaching 2 percent, the friction head loss increases over that of water, thus causing a reduction in the sewer capacity. At 2 percent concentration, the capacity of a sewer flowing full is reduced to 60 percent of its design capacity with water.

Over the range of conditions tested, the heavy glass and metal particles settled to the bottom and were transported by sliding along the bottom surface. At velocities above 1.5 ft/sec and refuse concentrations less than 1.5 percent the lighter refuse constituents, such as, paper, plastics, cloth, etc., were transported as a heterogeneous suspension without settling. At velocities less than 0.8 ft.sec, a

sliding bed type of flow was observed with settling of the light constituents to form the bed. At these low velocities, the possibility of obstructions in the flow path leading to solids build-up and clogging was found to be high. At high refuse concentrations of greater than 2 percent and velocities up to 4 ft/sec a plug type flow occurs, where all the solids move en masse without relative motion and settling. Even heavy glass and metal pieces can be carried in suspension at these concentrations.

At the dilute concentrations of less than 1.5 percent a minimum velocity of 2.5 ft.sec is essential to scour the heavy deposits of glass and metal and maintain self cleaning conditions. At the higher concentrations, of greater than 2 percent, the particles are carried in suspension and no minimum velocity is required.

As the normal design flow velocity in sewers is greater than 2.5 ft/sec, the ground glass and metal pieces should be transportable.

The type of grinding operation, be it dry, such as, the hammermill or wet, such as, the hydropulper, has no effect on the refuse slurry flow, for particles less than 1.5 inches in size, over the range of refuse concentrations and flow velocities investigated.

Of all the constituents of household refuse, cloth and rags were the most troublesome. Both dry and wet grinding reduced cloth to long stringy pieces which would wrap around

any obstruction in the flow path and lead to clogging. Cloth should be ground into small rectangular pieces of 1.5 inches maximum size before introducing it into the flow or it should be excluded.

The results of this study indicate that the specified requirements for a household refuse grinder appear reasonable and attainable within the state of the art. The development of such a design is described in the chapters that follow.

CHAPTER 3

DESIGN CONSIDERATIONS FOR A HOUSEHOLD REFUSE GRINDER

Introduction

Municipal refuse grinding prior to incineration or land fill is an accepted method of solid waste treatment in certain countries. A large variety of machines are presently available some of which have been described in a review by Patrick.[9] The general refuse grinding is made difficult by the wide variety of materials to be ground, having different strength characteristics and shapes. Most municipal refuse grinders are high-power, high-production machines where grinding difficulties are generally overcome by adding more power and mass to the machine. Due consideration of the operating environment of the proposed household grinder would show significant differences from that of a municipal grinder. This could possibly lead to great simplification in grinder design.

This section describes our "Systems Approach to Design" as applied to the development of a household refuse grinder. This approach can best be summarized by the following series of steps:

(1) Defining the functional requirements of the product.

(2) Defining the interactions between the product and the user.

(3) Determining the product interfaces with adjacent equipment.

(4) Determining processes and conditions for which functional performance can be optimized.

Consider how these affect the design of a household refuse grinder.

Functional Specifications

Grinding of Domestic Refuse. The refuse grinder is required to macerate domestic refuse consisting of newspapers, magazines, cardboard, cellophane, glass, plastics, wood, occasional pieces of aluminum, and garbage not ground in conventional garbage grinders. Thus the grinder is required to work with a variety of materials of different shapes and sizes having different strength characteristics. Table 4 summarizes some of the typical physical characteristics of refuse and the most suitable mechanism for size-reduction.

Based on the results of Phase I of this program the following particle size specifications have been developed:

(1) Less than 1.5 inches for the light organic constituents of ground refuse, such as, paper, plastic etc., with a minimum of fines which would lead to difficulties in separation.

TABLE 4

PHYSICAL CHARACTERISTICS OF REFUSE

Type of Refuse	Shape	Material Type	Possible Method of Disintegration
Paper	Flat, thin sheets, boxes	Short fibers pulpable	Shearing, tearing, preferably at high velocity, wet
Wood	Rods, flats	Fibrous	Shearing, tearing, crushing
Cloth	Thin sheets	Long fibers	Shearing, tearing
Plastics	Thin sheets or hollow containers, foam	Very ductile	Shearing, tearing
Metals	Hollow containers, continuous flat thin sheets	Ductile	Shearing, tearing
Ceramic and glass	Hollow bottle, flats	Brittle	Fracture by crushing, impact, no shearing
Wire	Rods	Ductile	Shearing

(2) Cloth should be reduced to small pieces less than 1 inch square with an absolute minimum of pieces which are stringy or fibrous in nature. Once again fines resulting in a non-settling, difficult-to-separate suspension, are to be avoided.

(3) Less than 3/8 inches for heavy materials, such as, glass and metal. The metal pieces from cans should preferably be crumpled into balls, rather than remain at flat pieces, in order to permit rolling along the pipe wall. Extremely fine particles, such as produced by abrasion, are unacceptable.

From a preliminary analysis of the nature of the components of household refuse and the above specifications it can be concluded that no single size reduction mechanism would be applicable to all the constituents and that more than one mechanism would be required. Other factors, such as the need for reliable, jam free operation, ease of maintenance, power rating, size and cost will all affect the selection of the grinding mechanism.

Slurry Formation. The ground refuse must be mixed with available water to form a slurry having a concentration of less than 1.0 percent by weight. This slurry will flow under gravity into the sewer through the normal household plumbing. Thus, a wet grinding process would be desirable.

Interactions Between the Household Refuse Grinder and the User

Size and Type of Machine. The quantity of domestic refuse production per capita is estimated at 5 lbs. per day. This is a relatively small quantity of refuse for a machine to grind, so that a batch type of operation would probably be quite suitable.

Unlike the domestic garbage grinder which services garbage principally generated in the kitchen, the domestic refuse grinder would be required to service refuse generated throughout the whole household. Thus the basement or service room having ready access to water and drains would probably be the most likely location. Trash would be collected and loaded into the grinder for processing, much like a clothes washing machine. The most appropriate machine size would possibly process approximately 20 lbs. of refuse in one loading.

Most industrial and municipal refuse grinders are designed for continuous, automatic, operation with a minimum of operator attention. However for the case of a household unit, the interaction of the user with the grinder must be gainfully employed to simplify product design and operation. A fully automatic, fool-proof machine, capable of indiscriminately grinding all the household refuse will be large, too high powered for domestic use, extremely expensive and generally unacceptable to the homeowner.

The refuse grinder must be designed to fall into the

general class of home appliances, such as washing machines, driers, dishwashers, garbage disposals, etc., commonly found in most American households. The homeowner's interaction with these machines has provided a certain degree of familiarity with the operation of such electro-mechanical devices and has instilled an appreciation for the penalties to be paid for mishandling. Inconvenience, and high repair costs are the operators negative rewards for a failure to develop such an appreciation. For example, the homeowner has learned to sort the clothes in the wash load appropriately (synthetics from cottons), to achieve the best washing results, or not to put hard to grind items, such as, corn husks, spoons, and forks into the garbage grinder. It is thus reasonable to expect this type of interaction between the user and the refuse grinder. For example, selective separation of refuse to remove ungrindable items, and collecting and recycling coarse grounds not passed through the machine are operations which can be built into the normal operating cycle of the grinder. At the same time the grinder must be designed to accept such misuse without catastrophic damage to its major components.

Thus, the most acceptable grinder operation would be a batch type, where the operator loads the machine, closes the lid and turns it on. Handles, controls and overall appearance must be made similar to the common home appliances.

Simplicity of Operation. A high degree of reliability, simplicity of operation, and ease of maintenance are essential

features dictated by the characteristics of the user. The average user is not mechanically minded and the unit has to be designed for operation accordingly.

Safety. Safety is of paramount importance with such a device placed in a household where inquisitive children can get at it. All openings and doors will have to be designed to shut off the machine upon opening.

The requirements for a high level of safety and low level of maintenance suggest a premium on design simplicity. It is more desirable to have a process that is inherently jam free rather than employ complex automatic features. Controls and interlocks will be required in any case. If possible the grinder should not employ sharp knives or edges as these will increase repair and maintenance costs. In fact, all moving parts should be self clearing, and meshing components of any kind should be avoided.

Power Rating. The rated machine power has to be kept within the limits of the rated current-carrying capacity of most households. Power can be reduced by increasing processing time. However, processing time should not be so long as to become objectionable to the household. A maximum power rating of 2 horsepower and a mean cycle time of twenty minutes is considered to be acceptable.

Grinding Rate. Because of the wide variation in refuse properties, fixed feeds are to be avoided. This eliminates the need for tremendous amounts of reserve power or inertia

when stronger components of refuse are encountered. This suggests an attrition process, one in which the refuse remains until reduced to a size which will allow it to pass through the grinder. Power, weight, and cost are thus minimized.

Employment of attrition is most easily done in a batch process, where the initial loading is the only feeding required, thus eliminating costly hardware for automatic refuse feeding. Batch feeding, as mentioned previously is also more familiar to the homeowner.

Noise. The noise level must be maintained at a reasonably low level to ensure user acceptability. The grinder is likely to be placed in the basement, away from the activity centers of the normal household.

Cost. Finally, equipment cost and cost of operation are the most important elements of user interaction on which the success of the product would depend. In the absence of legislation requiring the installation of such a device, its cost has to be competitive with other available methods.

The average yearly cost for trash pick up from a typical suburban residential community by commercial contractors is in the range of $50 to $70. Thus, in order to be competitive with this annual cost, the price of the household refuse grinder must lie in the few hundred dollar range.

This is a fairly low cost for such a device and in order to meet this limitation simplicity becomes mandatory. The incorporation of multiple stages of grinding, automatic sorting,

automatic jam clearing, or junk rejection become highly unlikely.

Grinder Interfacing with Adjacent Equipment

Water supply for processing the solid waste into a slurry and discharging it to the sewers is probably the most important interfacing problem to be considered. In these days of concern for water conservation and excessive water requirements, a proposal for installing a refuse grinder requiring water for solids transport is apt to be viewed with a jaundiced eye by municipalities. Daily hydraulic transport of 20 pounds of refuse at a solids concentration of 1 percent by weight would require an additional 250 gallons per day of water. This increased water consumption would also result in an increased capacity requirement at the sewage treatment plants.

The proposed holding tank system overcomes some of these disadvantages. The holding tank would store used domestic water not containing fecal waste, such as water from baths, sinks, washing machines etc. This stored water would then be used for grinding and transporting the solid wastes. The operation of such a system would require an interlock so that the grinder would not operate until there was sufficient water in the holding tank.

The necessity for separating and storing non-fecal water implies a modification to the home plumbing system. The

extent and cost of such modifications would depend on the type and age of the house and the type of plumbing in the house.

Optimizing Functional Performance

Selection of the grinding mechanism and appropriate design of the grinding process is the principal determinant of performance. The large varity of materials to be processed and the peculiar characteristics of the user environment make this selection an extremely difficult process. Subsequent chapters of this report are devoted to a review of the different available processes and the evaluation and selection of the most promising ones for incorporation into the grinder design.

Since water must eventually be added to the refuse to form a slurry, it is advantageous to do so during grinding. Several benefits are derived from this.

(1) The water reduces the strength of the major component in the refuse, namely paper, resulting in a savings in power.

(2) Noise, and particularly dust are reduced by the presence of the water.

Wet grinding can best be achieved by continuously feeding water into the grinder at a rate high enough to achieve the 1 percent slurry. This continuous flushing action minimizes the amount of water in the grinder bowl, and consequently the power consumed in churning the water, while achieving the beneficial effects simultaneously.

Summary of System Specifications

Figure 1 shows a schematic of a typical household refuse grinder system located in the basement of a house. The system design specifications are summarized as follows:

1. The grinder must operate on a batch process having a full load capacity of up to 20 pounds of mixed household refuse and a cycle time of approximately 20 minutes.
2. The grinder must reduce the light constituents of refuse, such as paper, plastics, cloth etc., to a particle size less than one inch square. Stringy or fibrous pieces of cloth are to be avoided. Fine, fibrous particles which can form a non-settling, colloidal suspension are to be minimized.
3. The grinder must reduce the heavy constituents of refuse, such as, glass, aluminum, steel into pieces less than 3/8 inch in size. The shape of the particle should be preferrably three dimensional, such as a sphere, and not flat. Once again, difficult to separate fines are to be minimized.
4. The grinder should be capable of grinding all the components of household refuse, excepting heavy gauge steel cans.
5. The grinder should carry a maximum 2 horsepower rating.

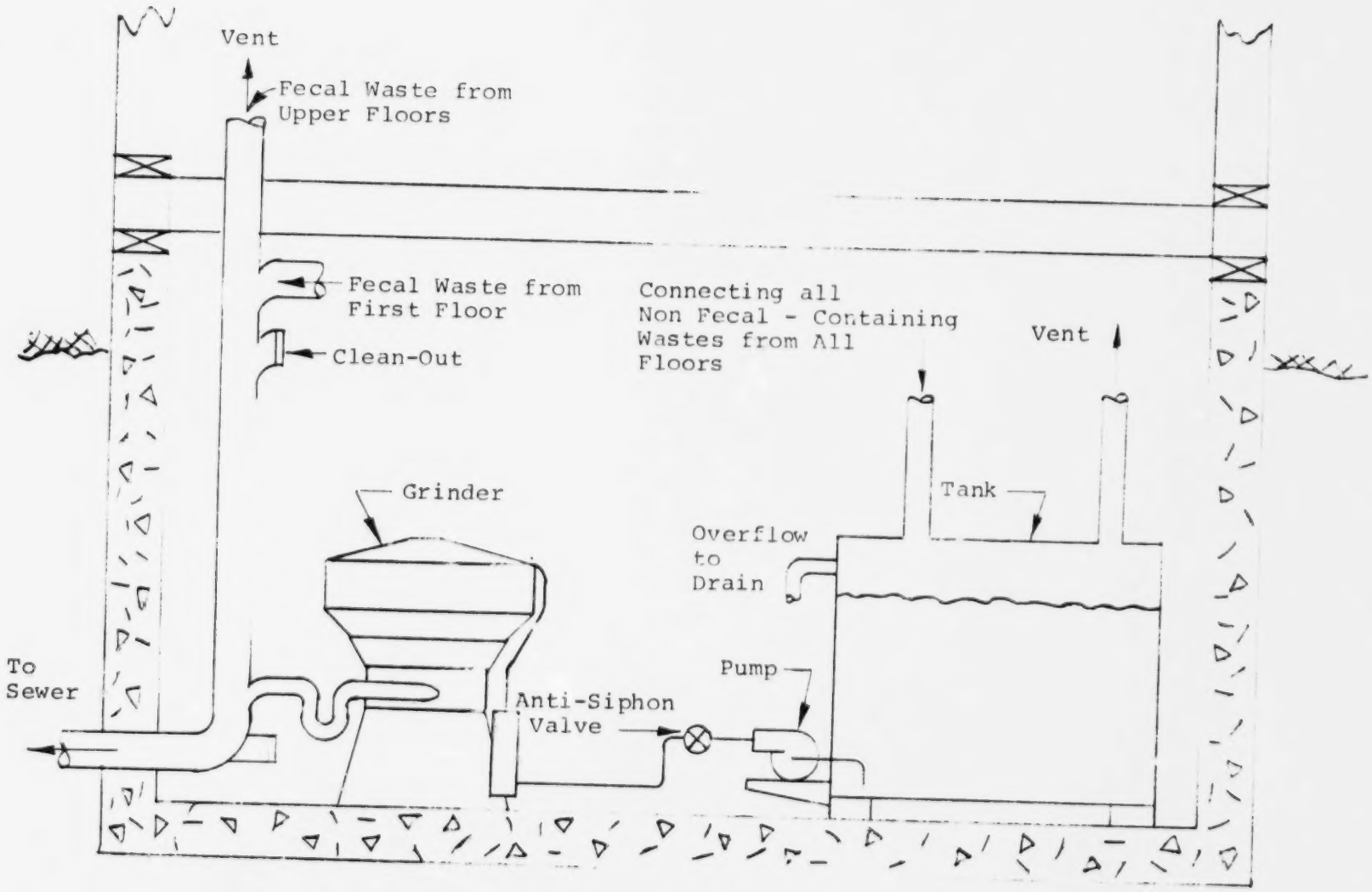

Figure 1. Typical Grinder System Configuration, Basement Installtion.

6. Wet grinding should be the preferred mode of operation.

7. The ground refuse slurry flowing into the sewer from the grinder should have a maximum solids concentration of 1.5 percent by weight, with a 1 percent maximum preferred.

8. Design simplicity is of the utmost importance to ensure reliability, ease of maintenance and jam free operation.

9. A grinding mechanism which does not rely on the sharpness of the cutting edge is to be preferred.

10. To ensure maximum user acceptability, the grinder design should parallel the design of large household appliances such as washing machines, clothes drier etc. Controls and operating procedures should be similar, in order to fully utilize the homeowner's experience and respect for the operation of such electro-mechanical devices.

11. Operating safety and tamper-proof design is of prime importance.

12. The household plumbing must be modified to separate the fecal from non-fecal waste water, the latter to be collected in a storage tank for subsequent use in the grinder. The storage tank must have an approximate capacity of 300 gallons, which is approximately the size of an average fuel oil heating tank.

13. The selling price of the grinder should not be significantly greater than a typical major appliance, namely several hundred dollars. When selling price and maintenance are amortized over the useful life of the grinder, the annual cost should be of the same order of magnitude as the present $50 to $70 yearly cost for household refuse collection.

CHAPTER 4

METHODS OF SIZE REDUCTION

Classification of Size Reduction Processes

There are three basic mechanisms interacting in the size reduction process, namely, tension, compression and shear. Tension is normally obtained through a bending or tearing action. Compression can also be obtained by bending, but is more commonly achieved either by crushing at low velocity or by impact at high velocity. Low speed shear is achieved by holding the material between sliding members, while high speed shear is provided by impacting the material against a sharp edge or blade.

Brittle materials such as glass can be reduced in size by a process causing brittle fracture, such as crushing under an applied external force or by high-velocity impact with a hard surface.

Ductile materials in the form of thin sheets can generally be sheared into small pieces by repeated cuts. Thick pieces can be either sheared or surface machined with a cutting tool.

Fibrous materials such as paper and nylons, and highly elastic materials such as rubber can be reduced in size by shearing or tearing.

Many comminution machines utilize one of these mechanisms as the basic size reduction process, but most equipment

intended for use on mixed solid waste would probably require a combination of all three mechanisms.

From an operational standpoint these basic mechanisms can be further classified generally on the basis of the speed of the cutting operation and the relative sharpness of the cutting tool.

Speed of Cutting Operation. Two general classes can be identified. In high-speed cutting, the tool passes through the material or vica versa very rapidly. The material does not have to be supported since the material inertia provides the necessary resistance to the applied cutting force. In low-speed cutting, the material has to be rigid or rigidly supported to prevent flexure under the slowly applied cutting force.

A jam caused with high-speed operation is likely to be more damaging to the machine unless adequate overload protection is provided. Also wear with high-speed operation would tend to be more severe.

Cutting of relatively thin flexible materials is generally achieved by high-velocity sliding of the material past a sharp tool or by tearing at high velocity with a dull tool. Brittle materials can be crushed at low velocity or fractured by impact at high velocity.

Sharpness of the Cutter. Material can be cut by sliding material past a sharp blade edge or by punching through the material with a relatively dull tool. For most materials, the sharper the blade the smaller the cutting force. However, the

whole operation is quite dependent upon blade sharpness, and performance will suffer with blade dulling. Dull tool operation is thus more reliable being independent of tool characteristics. However, it does require a larger force.

Review of Available Size Reduction Equipment. A number of commercial manufacturers of size reduction equipment were contacted as shown by the list of Appendix A. The equipment is in general much too large and expensive to have direct application to the household situation and further most machines are not intended for mixed refuse but rather for a specific type of feed. Table 5 provides a summary of the different classes of equipment, the basic processes used for size reduction, the type of size reduction operation, general characteristics of the equipment such as size, power, size of grinds, the type of refuse processable, and a list of typical manufacturers. A brief description of the various types of equipment follows.

Description of Commercially Available Size Reduction Equipment

Hammermills. Hammermills constitute the largest percentage of municipal waste size reduction equipment in use today. Figure 2 shows a typical configuration. They comminute the material by the high velocity impact of hammers applying a combination of compression, shear and tension forces on the material. Thus they are capable of working on a combination of brittle,

Type of Grinding Equipment	Size of Grinding Chamber	[illegible]	[illegible]	[illegible]	Type of Manufacturers	Comments
Hammermills	[illegible]	[illegible]	[illegible]	[illegible]	[illegible]	Massive equipment, noisy and dusty, high initial and operating cost, feed rate sensitive, high power [illegible], wiring by attrition
Shears	[illegible]	[illegible]	[illegible]	[illegible]	[illegible]	[illegible]
Shredders, Chilkers	[illegible]	[illegible]	[illegible]	[illegible]	[illegible]	[illegible]
Crushers	[illegible]	[illegible]	[illegible]	[illegible]	[illegible]	[illegible]
Cage Disintegrators	[illegible]	[illegible]	[illegible]	[illegible]	[illegible]	[illegible]
Grain Pulverizers	[illegible]	[illegible]	[illegible]	[illegible]	[illegible]	[illegible]
Rasp Mills	[illegible]	[illegible]	[illegible]	[illegible]	[illegible]	[illegible]
Wet Pulpers	[illegible]	[illegible]	[illegible]	[illegible]	[illegible]	[illegible]
Sewage Grinders	[illegible]	[illegible]	[illegible]	[illegible]	[illegible]	[illegible]
Chemicals, Garbage Grinders	[illegible]	[illegible]	[illegible]	[illegible]	[illegible]	[illegible]

NOT REPRODUCIBLE

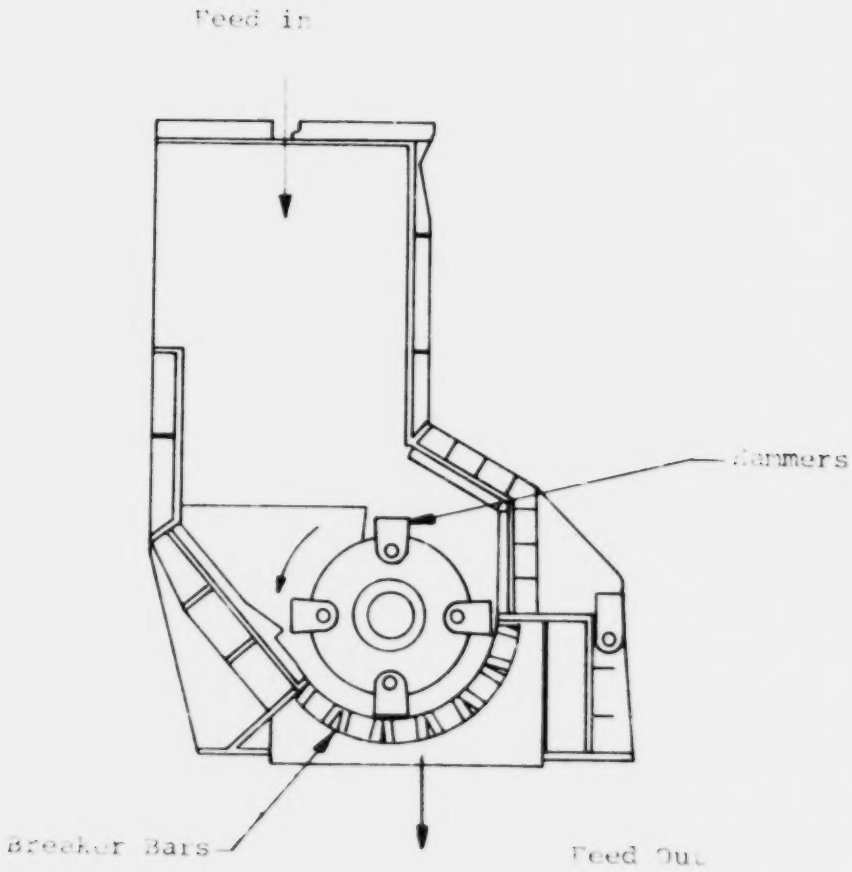

Figure 2. Typical Hammermill Configuration.

ductile and fibrous materials and consequently work well on municipal refuse. However, a proper control of the feed rate is critical to efficient, jam-free operations. Rapid hammer wear can result in relatively high operating costs and frequent stoppages for hammer replacement.

Generally, the machines are designed to operate with a minimum of screening of materials. Large size, power and inertia are the design features most utilized to comminute durable objects which may interfere with normal operation.

This design philosophy is contrary to the light weight and low power approach required for the household grinder design. Further, hammermills are quite noisy and dusty since they are used for dry grinding.

Shears. Shears may be single bladed like a guillotine, or may employ multiple sets of scissors-like blades. They are principally used on bulky items such as wood or on strong ductile materials such as scrap metal and automobile bodies. The application of force is usually slow, and the machine is large and heavy with moderately sharp blades. Materials that have great compressive strength (hard, brittle materials) usually cause damage to the blades and therefore render shears impractical for mixed or unsorted refuse.

Shredders and Cutters. Shredders and cutters employ both tension and shear. Figure 3 illustrates both the simple cutting and the pierce and tear type. As with the shear, the cutter type relies on sharp blades and is therefore very

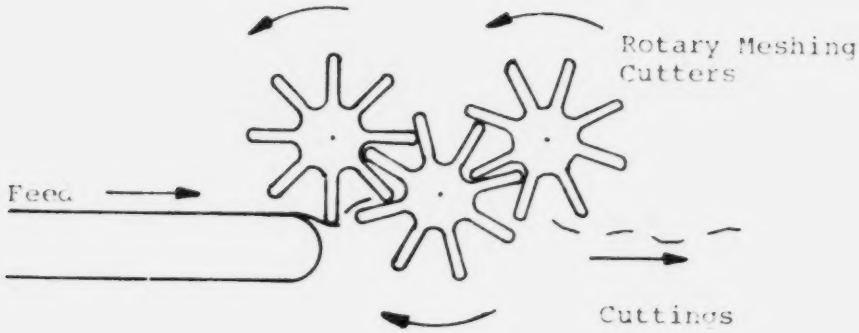

(a) Pierce and [illegible] Type

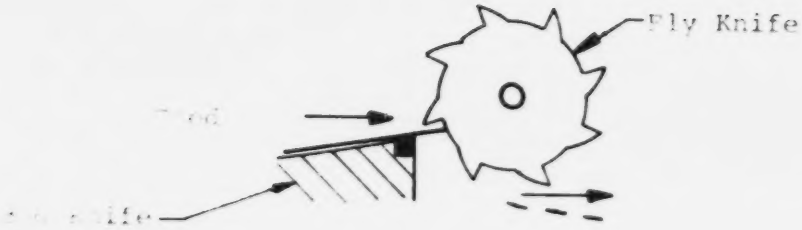

(b) Fly Knife/Bed Knife Cutter

Figure 3. Typical Shredder or Cutter.

susceptable to damage from hard objects. Pierce and tear types suffer somewhat less damage but are still prone to jamming on such items, and both types are fixed feed devices, necessitating large inertia in order to get through durable items in the feed.

Crushers. Crushers are typically of the jaw, roll, gyrating, or impact type as shown in Figure 4. Employing compressive forces almost exclusively, as supplied by the jaws or cones or rollers, they are useful only for brittle, friable types of feed. The hammermill also acts as an impact crusher for brittle materials. The crushers can be used for flattening or crushing the cans into a ball.

Cage Disintegrators. Figure 5 shows a typical cage disintegrator arrangement. Material is fed centrally and is flung radially outward through single or multiple counterotating cages, encountering many high speed impacts with the cage bars leading to frature and disintegration.

These disintegrators work well on brittle materials but have difficulty comminuting ductile or fibrous types of feed.

Drum Pulverizers. Drum pulverizers are basically tumblers, with most of the comminution being caused by the rolling and impact of the refuse against the drum and against itself. Some rasping or shredding may take place against stationary members inside the drum, but ductile objects tend to deform or ball up and pass completely through the drum as rejects.

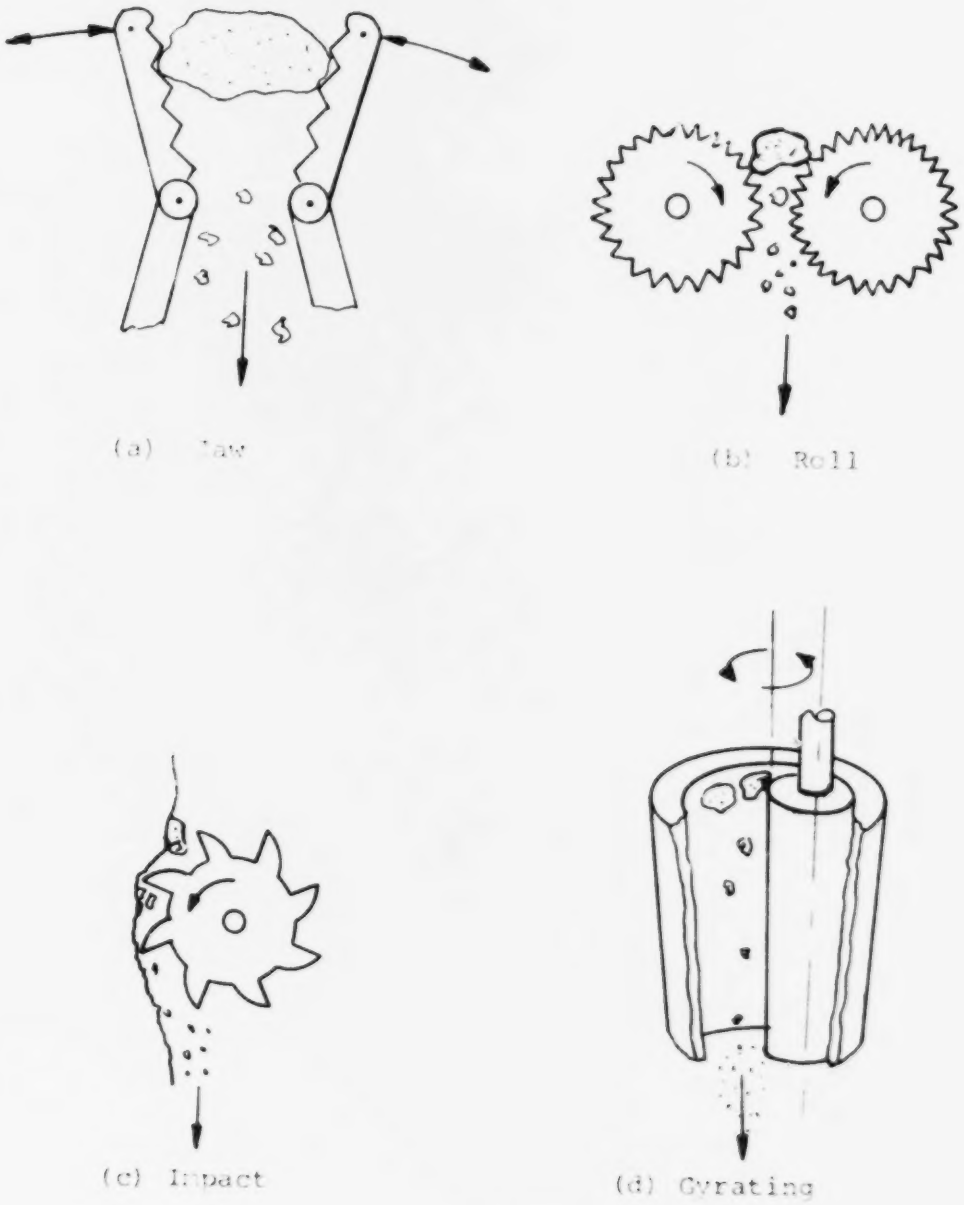

Figure 4. Crushers.

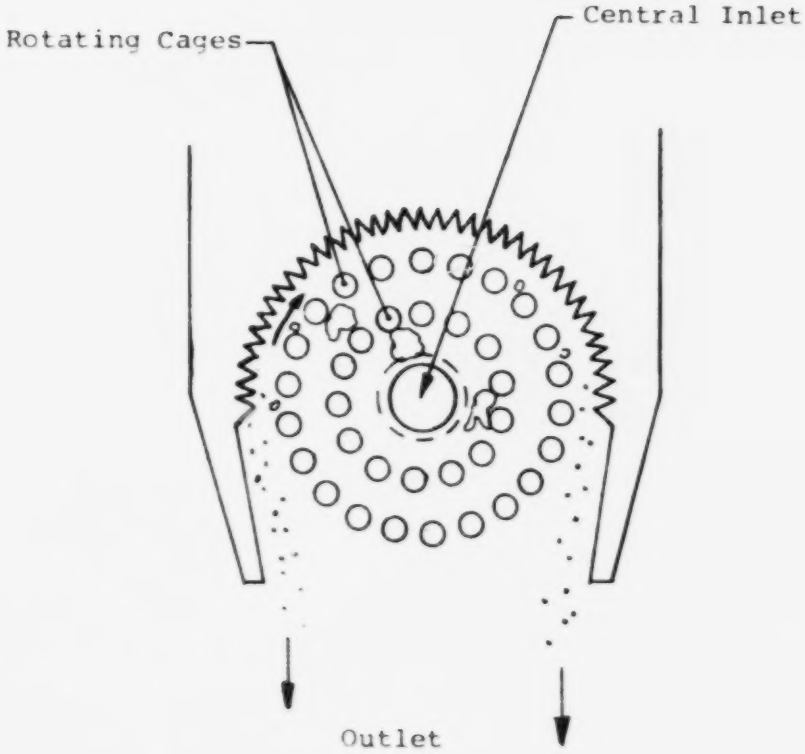

Figure 5. Cage Disintegrator.

Fibrous or brittle feeds are processed however, and the rejects do not tend to cause jamming. Although drum pulverizers consume relatively little power, they are large in size relative to their capacity.

Rasp Mills. Rasp mills utilize a comminution process similar to that of the drum pulverizers but arranged in a different geometry. Figure 6 illustrates this. Large revolving arms slowly push the refuse over rasping teeth and down through sizing holes in the bottom grate. The operation may be done dry, or wet, with continuous flushing water to carry away the grinds. Larger sizes are relatively jam free, and to some extent self limiting as far as feed is concerned. This allows the mill to be used in a batch operation. The thrashing and tearing operations employ all three basic size reduction mechanisms enabling the mill to accept a very wide range of feed types. Reject chutes can also be arranged to reject durable bulky items.

Disk Mills. Disk mills are usually arranged with single or counterrotating disks, as shown in Figure 7, with the feed entering axially through one disc. Teeth or other protrusions on the faces of the disks may intermesh, providing a torturous path for the feed as it works its way radially outward. High speeds and small clearances are often used. Due to the small inlet size, disk mills for municipal applications are usually confined to secondary size reduction after a preliminary sorting has been performed. Since the disk mill provides an impacting and tearing action it is normally used in the paper industry

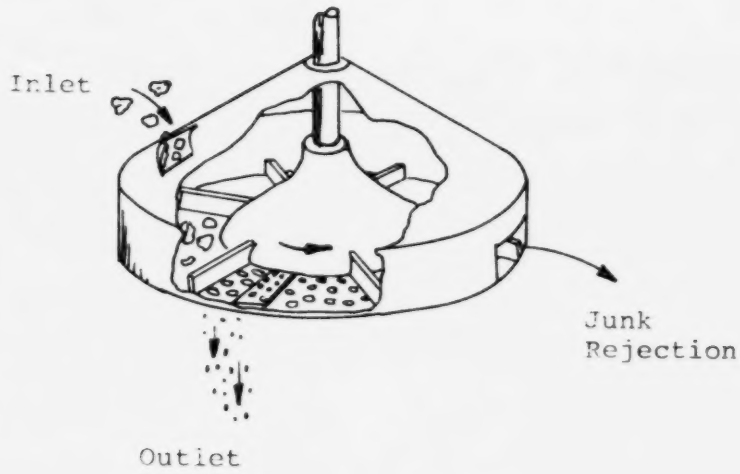

Figure 6. Rasp Mill.

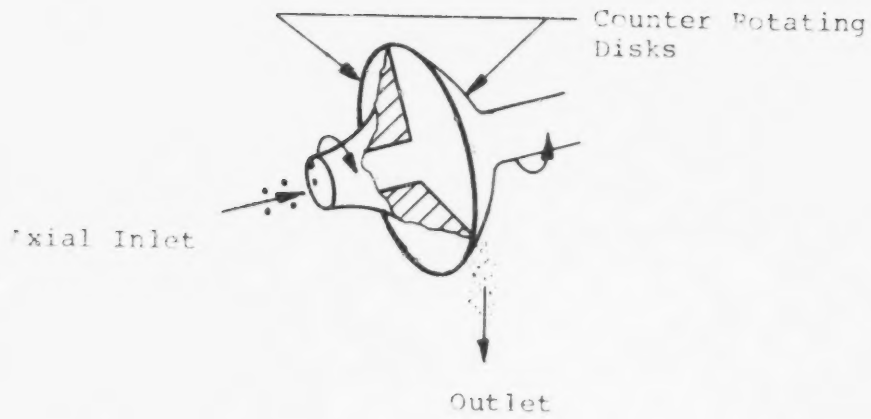

Figure 7. Disk Mill.

to process pulpable material and in the formation of powders such as flour and sugar. At least one manufacturer* has succeeded in arranging a disk tooth pattern and shape to provide a combined shearing and tearing action that will work well on light gauge metals, such as cans, as well as stringy materials, such as rage, cloth, and sheet plastic. The bending and impacting provided by the meshing teeth also works well on glass.

Although the disk mill is quite power intensive, it does have the capability of operating with a continuously flushing liquid, which cleans the disks, forms a slurry, and carrys the grinds away. A disadvantage is the inability to accommodate or reject hard, durable, objects in the feed.

Wet Pulpers. Figure 8 illustrates two typical wet pulpers, or hydropulpers. They are both "blenders" employing a high speed impeller to generate a toroidal flow in the water carrying the refuse. The water weakens the pulpable portion of the feed, which is then reduced by the churning flow in the pulping tub. Friable items are carried up the walls by the toroidal flow and then dropped into the center and broken by impacting the spinning impeller. The pulper easily lends itself to a batch operation since size reduction is by attrition, with the more durable items remaining in the pulper until they are small enough to pass through the sizing holes. Sizing may be accomplished by a circumferential ring or a bottom grate, as depicted in Figure 8.

---

* Jones Division, Beloit Corporation.

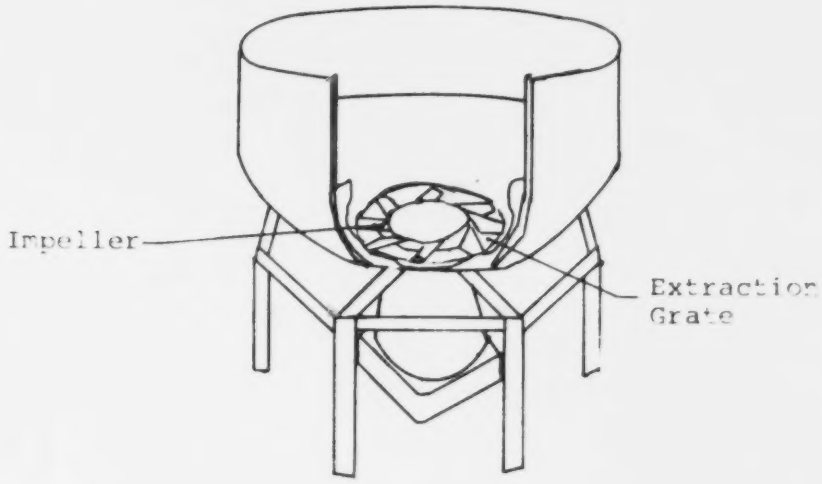

Black-Clawson Pulper with Bottom Extraction

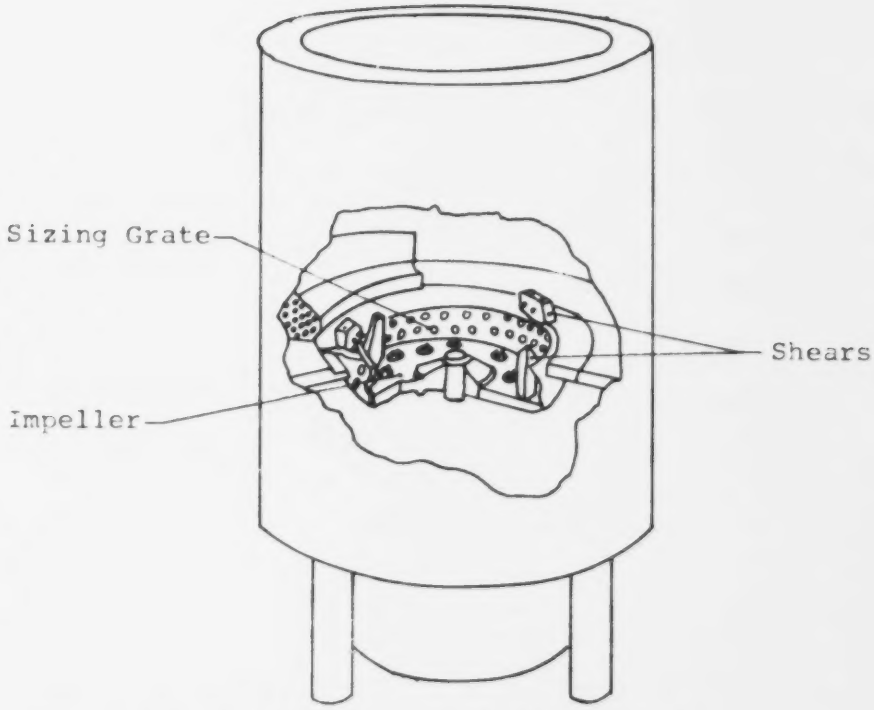

Figure 8 . Somat Pulper with Shear Blades.

The pulper works rapidly and efficiently on fibrous materials such as paper, and brittle materials such as glass. In an attempt to reduce ductile materials such as metal and plastic, several manufacturers have included a tearing or shearing action by providing teeth or arms on the impeller. These sweep over the bottom grate or along the sizing ring, as in a rasp mill. A ballistic-rejection of hard "junk" is achieved in some designs by allowing these objects to be flung through an opening in the wall of the tub against an inrushing stream of water. The results is a very versatile "grinder" that is one of the most jam free and power efficient designs of any reviewed here.

Zandi and his co-workers[2] recommended the use of a hydropulper followed by a Dorr-Oliver Gorator (a shear-type shredder) to complete the maceration of ductile items.

Because of the features just cited, the hydropulper is now seeing increased usage in the solid waste field. The Black-Clawson Company of Middleton, Ohio, uses a hydropulper as the primary size reduction machine in their waste processing and reclamation plant for the town of Franklin, Ohio. A number of manufacturers are successfully selling smaller units for such applications as hospitals, restaurants, school dormitories, and the like. For these installations the pulper serves solely to reduce the volume of the refuse. The slurry found by the pulper is pumped to a water press, where the water is extracted and returned to the pulper. The wet pulp, now a fraction of the original refuse volume, is trucked away in the conventional manner.

Sewage Grinders. Most sewage grinders employ sharp knives or blades for an efficient cutting (shearing) action. As a result they are very intolerant of hard objects such as glass and metal.

One manufacturer* uses a spinning, perforated abrasive disk, through which all the flow must pass. This design is more tolerant of hard objects but is not intended to process them on a regular basis. Impact is not efficiently provided, so glass tends to remain in the unit for a long time, and metal is simply abraded away until it is small enough to pass through the disk perforations, resulting in an unacceptably high concentration of fines.

Disposers, Garbage Grinders. The familiar sink-mounted garbage disposer does not fit neatly into any of the preceeding categories. The use of an impeller and constantly flushing water is similar to a pulper, but most of the items intended to be processed by a disposer require shearing to affect comminution. This is accomplished by allowing the impeller to spin the garbage while at the same time flinging it outward against the walls of the chamber. The walls contain holes or louvers which are usually sharp, and these have a rasping effect on the garbage as it passes by. The action is one of tearing and shearing as in a rasp mill or simple cutter. Such units are specifically designed for soft feeds, and their sharp cutters will not tolerate hard objects.

---

* BIF Sanitrol, General Signal Corporation.

Abrasive Methods. Purely abrasive techniques would probably handle the varied nature of mixed refuse, but the flow studies have shown that the fines which would be produced by an abrasive process are difficult to transport since higher velocities are required to insure adequate scouring. Abrasive processes are not efficient and separation problems are created at the treatment plant.

Saws. Saws are generally used for fibrous materials and occassionally for metals. Hard, brittle materials can only be cut with abrasive saws, which exhibit drawbacks already cited. Short life, high cost, and complicated hardware to hold the material being cut, all contribute to make saws generally unsuited to the comminution of mixed refuse.

Exotic Approaches. Such exotic methods as lasers, electron beams, high speed water jets and the like have been categorically eliminated from this program.

The state of the art is rapidly changing in these fields, but it is presently beyond the scope and, we feel, the intent of this program to evaluate such methods for household use. As more knowledge and experience is gained in these areas, perhaps some specific research would be justified in the area of solid waste.

CHAPTER 5

SELECTION AND EVALUATION OF GRINDER DESIGNS

Based on a careful analysis of the household grinder requirements outlined in Chapter 3, the following wet grinding concepts were selected for further evaluation:

(a) Hydropulpers

(b) Disk Mills

(c) Disposers

Dry grinding concepts were eliminated from further consideration due to increased power, noise and dust characteristics. This evaluation consisted of a careful analysis of the available experience with these machines on the grinding of mixed refuse and the conduct of a limited test program to measure grinding performance on mixed refuse.

Hydropulpers

Hydropulpers employ a wet process for grinding where the components to be ground are totally immersed in a tub of water. Size reduction is by attrition, with continuous pumped flushing to carry away the grinds in slurry form. Simple direct drive is feasible and the design requires a minimum of moving parts.

The hydropulper using a smooth impeller with no shear between moving surfaces can be designed to be essentially jam free. Grinding occurs by thrashing of the material in water and impact of the refuse components against stationary bars placed on the inside of the tub surface. Experience has shown that attempts by manufacturers to provide a shearing action between the impeller and nearby stationary members have met with limited success. Such shearing members can be made relatively jam free but they tend to suffer considerable damage from very hard objects in the refuse.

The hydropulper unit made by Wascon Co. of Hatboro, Pa. and located at the women's dormitory at Radcliffe College, Cambridge, Massachusetts was used to prepare refuse samples for the hydraulic studies of Phase I of this program.[3] An analysis of the operation of this machine on the dormitory's refuse provided valuable information on its capacity to grind mixed refuse. The input to the machine represented an extremely good sample of household refuse. The unit itself is too large to have significance in terms of power, however the following operational characteristics are worth noting:

1. All types of paper are processed easily.
2. Metal cans are not macerated but are crumpled and rejected ballistically to a junker.
3. Glass bottles are crushed generally, except for an occassional large chunk of glass escaping to the junker.

4. Plastic bottles tend to remain in the machine for a long time before finally being torn apart.
5. Thin film plastic, such as trash can liners, are processed fairly well.
6. Crumpled coathangers remain in the machine because they are not heavy enough to be ballistically rejected, but they do not appear to cause stoppages.
7. Rags and pieces of string can sometimes be hard to grind. They either get entangled or get reduced to narrow long stringy pieces which are likely to cause blockages in the transport medium.
8. Jams are usually caused by large strong objects capable of bridging the entire impeller or by steel cutlery wedging between the impeller and the shearing blades.
9. Maintenance usually consists of replacing worn or broken deflector blades.

To keep maintenance to a minimum, the operator sorts the refuse as it is being fed into the machine, and removes many hard items that would normally go unground into the junker. This significantly increases the life of the wearing parts in the pulping chamber. The importance of this operator-machine interaction becomes evident on reviewing the performance of a similar hydropulper located in a low income apartment demonstration project in New Haven, Conn.[11] The pulper was installed in the basement and was fed via chutes by tenants from all floor levels.

This arrangement voided the tenant of all association with the pulper and resulted in a great number of breakdowns caused by totally ungrindable items being fed down the chutes. Rags were a principal cause of stoppages.

The advantages of the pulper are its simple construction and reasonable power consumption. It is thus a suitable configuration for the design of a household grinder. Machine operation would require some sorting of the refuse by the homeowner to remove metal and heavy pliable plastic, but this could be done after the machine cycle. Ungrindable items would just remain in the machine until the end of the cycle.

With the incorporation of certain design changes, the machine could be made to operate satisfactorily on cloth and rags and tolerate metal cans without damage or jams.

To increase the performance of the hydropulper on mixed refuse, Zandi[2] used a series combination of a Wascon hydropulper followed by a Dorr-Oliver Gorator.* A similar combination was used in Phase I to prepare a test sample for the hydraulic tests.

Figure 9 shows how the Gorator works. It is basically a shredder with meshing teeth to impart a shearing-tearing action. Zandi found this combination capable of reducing the metal cans not consumed by the pulper, but textile fibers often tended to be dragged through the machine and frequently roped together to form long strands. Even when preceeded by a hydropulper

---

* Dorr-Oliver Inc., Stamford, Conn.

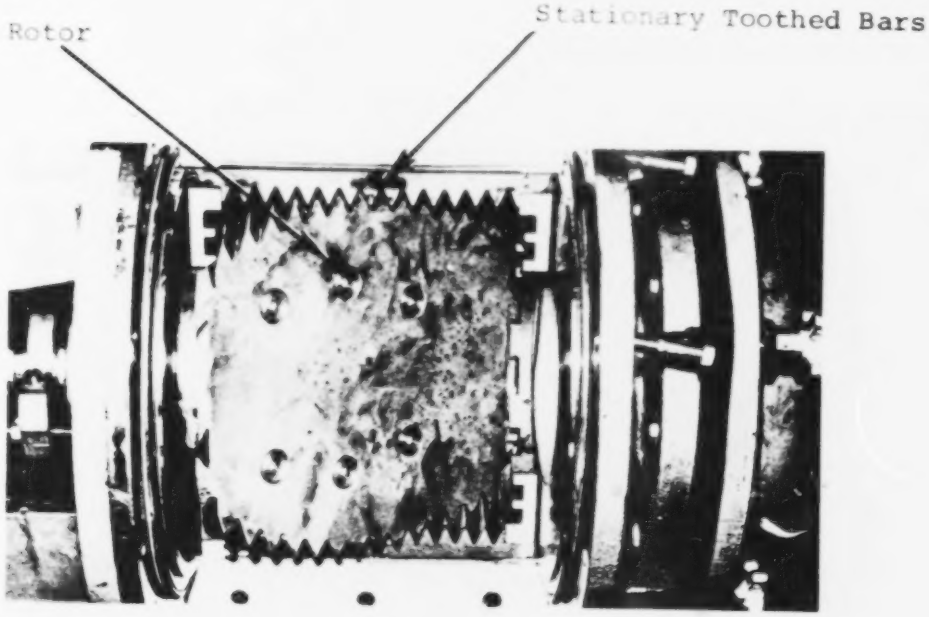

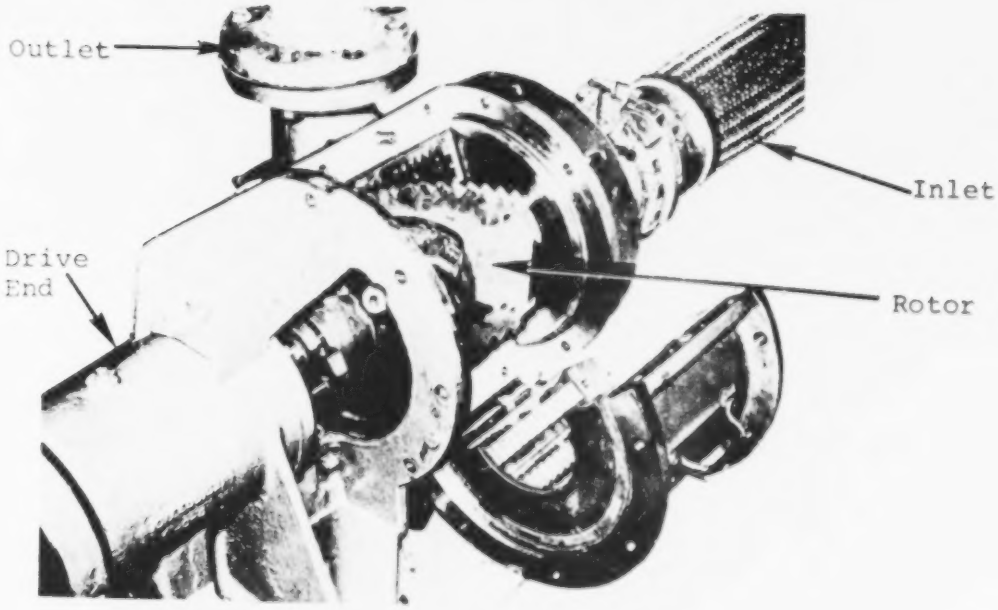

Figure 9. Dorr-Oliver Gorator.

the Gorator consumed large quantities of power (more than 10 HP), not practical for household applications. Although this Gorator was a higher capacity unit than would be required in the home, comparable minimum power levels appear needed to macerate metal cans. The Gorator's six inch inlet size would place severe restrictions on the feeding of many items without a primary size reduction ahead of the Gorator.

Disk Mills

Disk mills are not normally considered applicable to the mixed refuse problem; consequently, no information was found in the literature on this combination. Large disk mills, called Shredmasters, made by the Jones Division of Beloit Corp. are generally used by the paper industry and others for shredding fibrous materials such as saw mill waste, vegetable fiber, rags, etc., Figure 10 shows that the mill is a vertical axis, direct drive, axially fed machine. The smallest unit employs a 28 inch diameter rotor with 100 connected horsepower. Material entering the machine passes radially outward between two annular rings of shredder plates, one stationary and one on the rotor. These shredder plates have rows of teeth, arranged so the rotor teeth mesh with the stationary teeth. As material moves radially outward it is repeatedly torn and sheared between the fixed and moving plates. Tooth size, shape, and pattern, as well as plate spacing determine the size of the grinds, which are discharged from

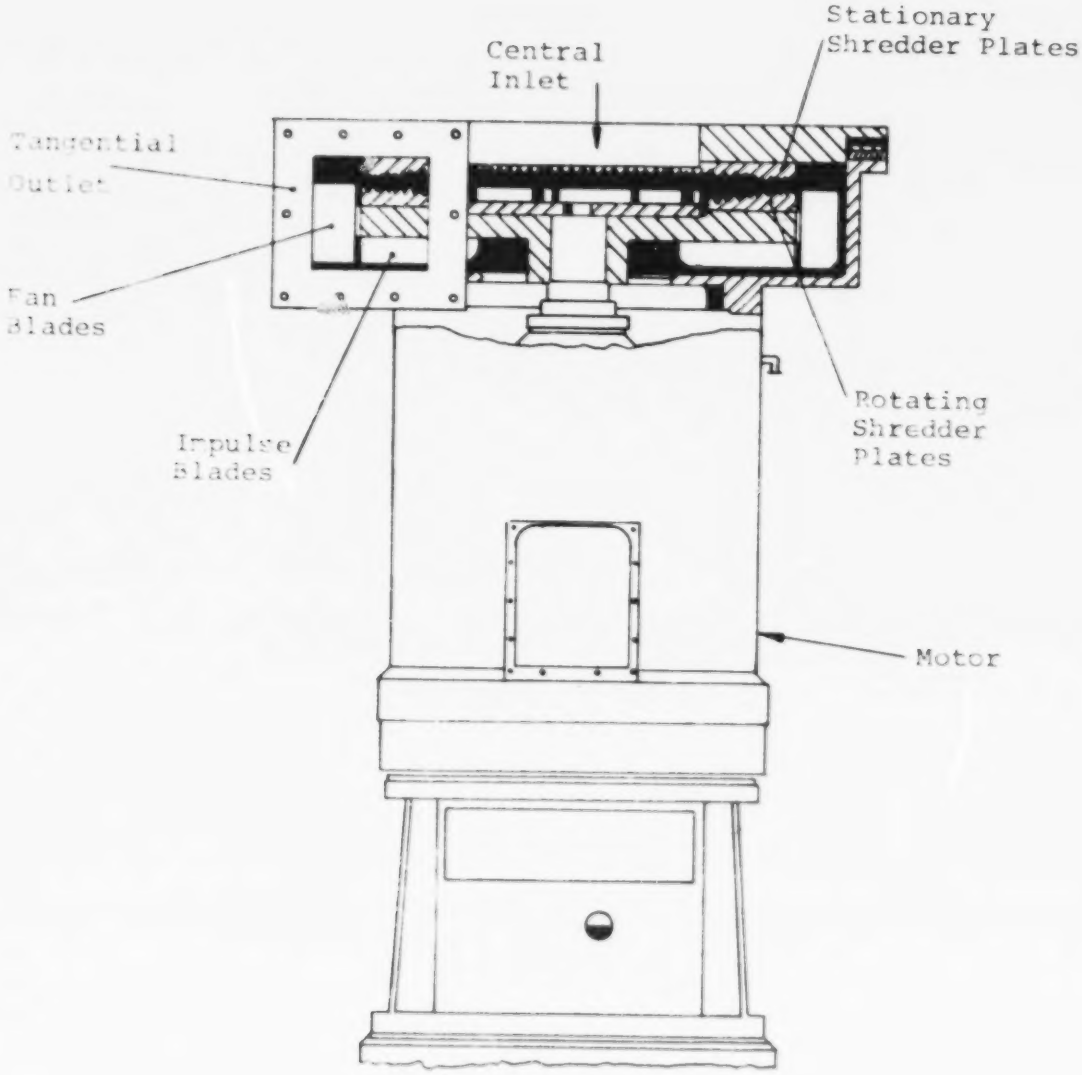

Figure 10. Beloit-Jones Shredmaster.

the scroll shaped housing by pump-like blades on the periphery of the rotor.

Obviously such equipment is too large to provide meaningful power data for the household problem. However, it is of interest in this case to note the variety of feed materials that Beloit-Jones has experimented with and the results they have obtained. In separate tests, Beloit-Jones has successfully shredded rags, wood, plastic, glass bottles, and metal cans. Particle size has been generally smaller than the ideal for sewer flow but this is easily adjustable. Paper and cloth are reduced to a short fiber pulp, glass to small particles, plastic becomes pelletized, and metal is reduced to small crumpled balls between 1/8 and 1/4 inch in diameter.

The Shredmaster is quite power intensive, the high cost of which is partially offset by its extreme simplicity of design. Gravity feeding and built-in discharge pumping are added features achieved with remarkable simplicity.

As with most axially fed machines, the Shredmaster is limited in the bulk of the material it can accept. A further disadvantage is the obvious jam that would result if irreducible objects enter between the plates. This could possibly be avoided by spring loading the stationary head, but has not as yet been tried. In most other respects the Shredmaster style of disk mill fits the previously mentioned set of design groundrules and has been proven capable of grinding, though admittedly on an enormous scale, virtually all of the components found in household refuse. Possible variations of this

approach to refuse grinding will be expanded upon in a subsequent chapter.

Certain similarities can be seen between the Gorator and the Shredmaster. They both employ meshing teeth running at fairly high speed with considerable clearance (3000 - 6000 fpm and .030 - .060 inch clearance). The rotor in the Gorator has a single row of coarse teeth, and material gets repeatedly passed through the shredding process until small enough to exit through sizing slots in the discharge. This may account for the stringiness observed when textiles are processed. The Shredmaster, on the other hand has multiple rows of teeth varying from coarse near the center to fine at the perifery and produces a more uniform particle size regardless of material. Both machines are fed axially but the Shredmaster employs a disk geometry whereas the Gorator uses a cylindrical arrangement.

The main thing to be learned from both pieces of equipment is that meshing, high clearance teeth are an effective way to reduce the strong ductile components in mixed refuse. Tearing, rather than close tolerance shearing, enables each machine to not only tolerate, but also process the brittle components such as glass. It remains to be proven however, whether power consumption can be reduced and jam resistance increased in order to make the unit suitable for household refuse grinding.

Garbage Grinder-Pulper

The garbage grinder pulper is a hybrid machine with characteristics intermediate between the hydropulper and the familiar kitchen disposer. Kitchen sink units employ relatively sharp blades or louvers and are intended primarily for soft feeds. Consequently, these units provide a great amount of shearing action and very little impact and are quite vulnerable to hard objects.

The grinder/pulper exhibits the same interaction between the impeller and the chamber walls as is found in a kitchen disposer but does so with relatively dull members running at comparatively large clearances as in a pulper. This results in a tearing action rather than true shear. Although this is less efficient it is far less susceptable to jams and damage.

The grinder/pulper exhibits most of the desirable features previously cited in Chapter 3 as design requirements, namely, a wet attrition process, batch feeding, continuous slurry formation, gravity discharge, few parts, direct drive, and low jam sensitivity. The single biggest performance compromise is in eliminating true shear in favor of tearing, this being for the purpose of eliminating jams and damage, and to keep maintenance costs down. Performance impairment will be most strongly noticed on the most pliable and ductile items in the refuse such as metal and heavy flexible plastic.

The Taylor-Stiles Division of Envirotech Corporation

makes a commercial garbage disposer which is comparable in size and power requirements to that specified for household refuse grinding. The unit is primarly designed for use in cafeterias, hotels, restaurants and ships. The unit is similar in design to a kitchen disposer except for some simplifications which tend to make the device perform like a pulper. There are no sharp edges, close clearances, or meshing teeth. The drive is direct and there is only one moving part.*

The grinding chamber of the disposer shown in Figure 11, consists of a disk shaped impeller which carries a fixed breaker bar and shredder ring with 45 vertical slots. These slots represent the only path available for the refuse to pass by the impeller to the outlet below. Unlike the submerged hydropulper, this grinder operates with a continuous throughflow of water similar to a kitchen disposer. Water introduced into the grinding chamber flows unhindered through the slots, carrying with it the refuse which has been ground small enough to pass through. Comminution is by attrition, with more durable materials remaining in the chamber until they are reduced.

The absence of sharp blades or meshing teeth is an attempt to make the grinder as rugged and jam free as possible. In so doing, true shear is traded for a tearing and pulping action, which makes the unit less effective on sheet metal and heavy plastic.

To further reduce jams the breaker bar is made

---

* Taylor-Stiles has discontinued manufacture of this unit because of an extremely limited market.

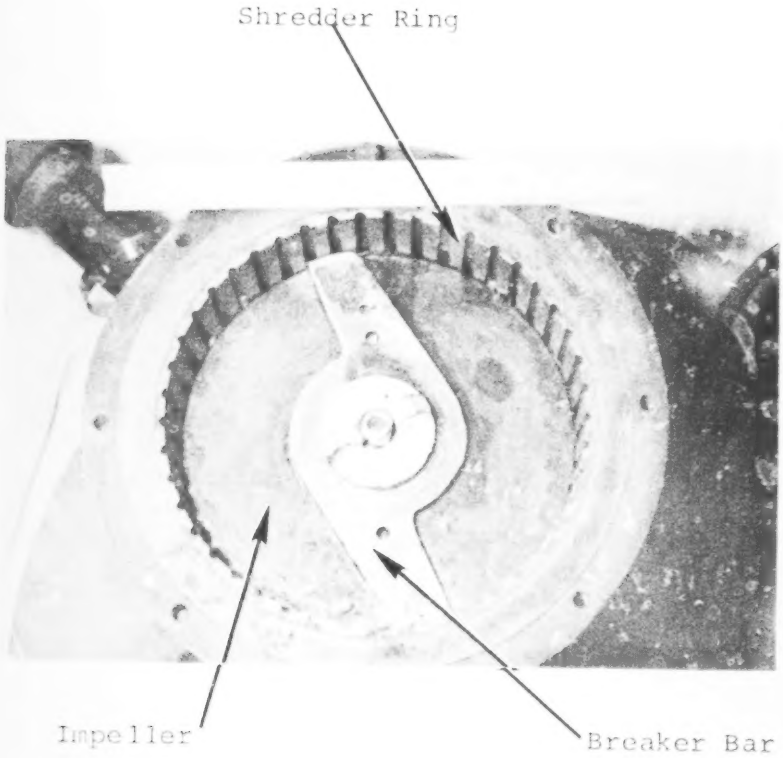

Figure 11. Grinding Chamber of Taylor Stiles Disposer.

relatively thin, about 3/8 inch. This limits the size of the "bite" when refuse is caught between a shredder ring slot and the passing breaker bar. It also allows refuse in the center of the chamber to be knocked up and over the advancing bar more easily. In this way the lowest layer of the refuse is beaten and pulped without having to churn the whole batch above, a definite power saving. Tearing takes place gradually as refuse is flung outward and tries to pass down the shredder ring slots.

The weight of the refuse above, flushing water, and centrifugal force all tend to bring the refuse to the breaker-bar, shredder-ring interface, but the geometry is such that jamming is highly improbable, and material is simply battered and torn until reduced to size.

Taylor-Stiles has no experience with the performance of this unit on mixed refuse, but only on food and paper. Since the design has a number of features directly applicable to the household refuse grinder design a simple laboratory test program was conducted to evaluate its performance on mixed refuse.

Test Program. The laboratory test setup is shown schematically in Figure 12. Tests were conducted with a variety of refuse compositions. The small inlet throat of the disposer limited the maximum feed size to about 5 inches. Larger items, such as bound books, were cut in half by hand prior to loading. Most of the tests were conducted with a continuous water

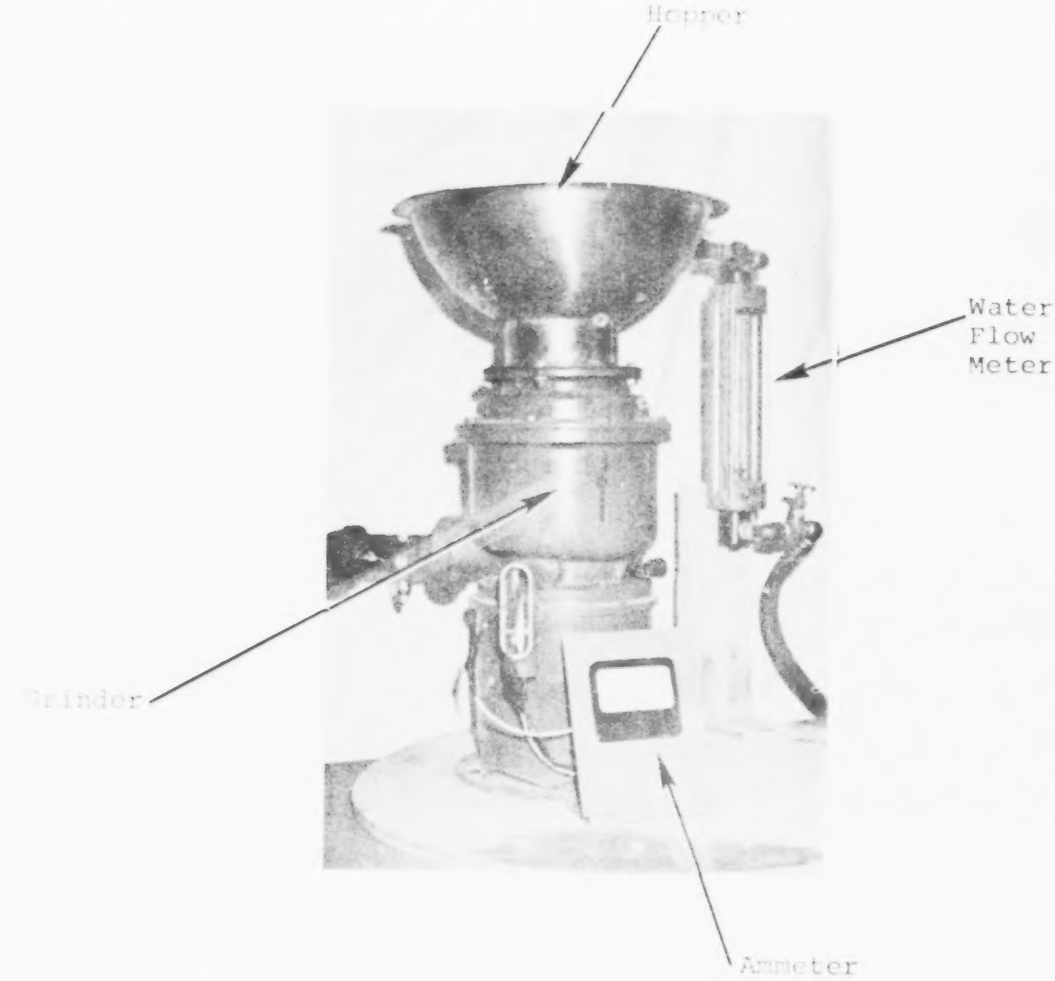

Figure 12. Test Arrangement of Taylor Stiles Disposer.

flow rate of 5-7 gallons per minute. It was found that a flow rate as low as 3 gallons per minute was adequate to carry away the grinds as long as the outlet pipe was pitched at an adequate slope.

The small inlet throat, combined with poor hopper geometry, prevented satisfactory gravity feeding without some manual assistance. Consequently batch sizes were kept small to avoid bridging at the inlet.

Grindability of Mixed Refuse. In order to study the grinder action on each material, initial tests were carried out on single substance batches of refuse. Table 6 lists each material with corresponding comments on grinder performance and grinding time.

As Table 6 indicates, some materials which could not be ground alone, were adequately processed when mixed with other refuse. Figures 13 thru 17 show some of the ground refuse mixtures after dewatering by draining.

Power Consumption. The unit is powered by a General Electric 3 HP, 480 volts, 3 phase induction motor. Measurements showed that the no load power was approximately 0.5 HP. Water flow rates from zero to 15 gallons per minute had no observable effect on no-load power consumption. The power required to grind refuse varied between 2 and 4 HP, depending on the type of refuse component being ground, with most requiring less than 3 HP.

The highest power levels were observed when grinding

TABLE 6

TAYLOR-STILES DISPOSER PERFORMANCE

Refuse	Comments
2 lbs newspaper, magazines, waxed cartons, cardboard	Ground completely in 3 min
2 lbs glass beer bottles	Ground completely in 1 min
1/2 lb celophane, light packaging plastic, and plastic coffee cup liners	Ground completely in 2 min
1 lb plastic coated paper plates	Ground completely in 2 min
3 oz styrofoam cups	Ground completely in 5 min
2 ox thin polyethylene sheet	Did not grind, plastic stayed in grinding chamber
1 lb heavy cardboard and bound magazines (Reader's Digest)	Ground completely in 2 min
2 oz heavy cotton cloth	Ground completely in 2 min
3 aluminum beer cans	Can bodies completely ground in 6 min, heavy gauge ends were left behind
1 aluminum pie plate	Crumpled but not ground
2 10 oz steel food cans	Deformed but not ground
1 coathanger	Deformed but not ground
2 plastic coffee can lids (polyethylene)	Damaged and slightly cut, but not ground
6" x 6" piece polypropeline backed nylon automobile carpet	Would not grind alone

TABLE 6 (cont.)

Mixture: (5 lbs total) polyethylene sheet, aluminum pie plate, plastic coffee can lid, aluminum beer cans, paper, beer bottles, nylon carpet (backed)	Polyethylene sheet, carpet and aluminum pie plate ground completely. Paper, glass, and aluminum can bodies completely ground. Plastic lid and aluminum can ends left being. Grinding time 7 min.
60 lbs beer bottles and 32 oz size soda bottles	Bottles fed 5 and 6 at a time, completely ground in 15 min.

Constituents: Paper, glass, cloth, plastic, styrofoam, aluminum cans, cardboard, magazines.

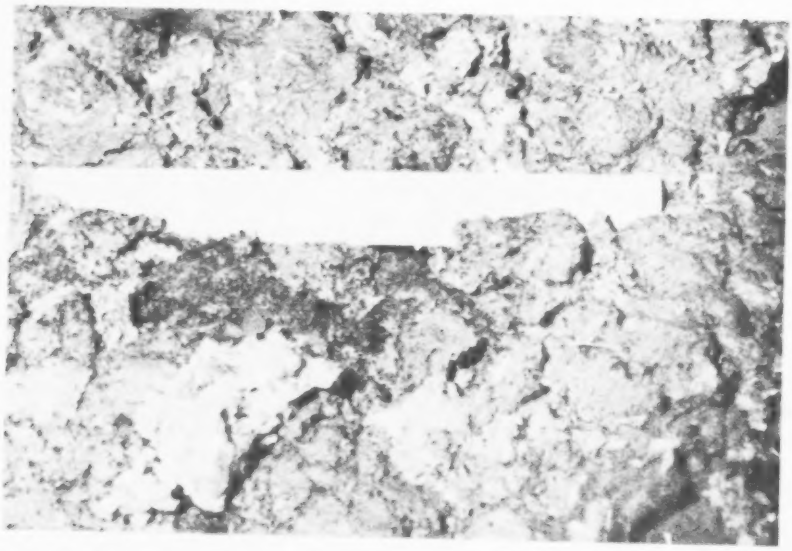

Figure 13. Ground (and drained) Refuse From Taylor Stiles Disposer.

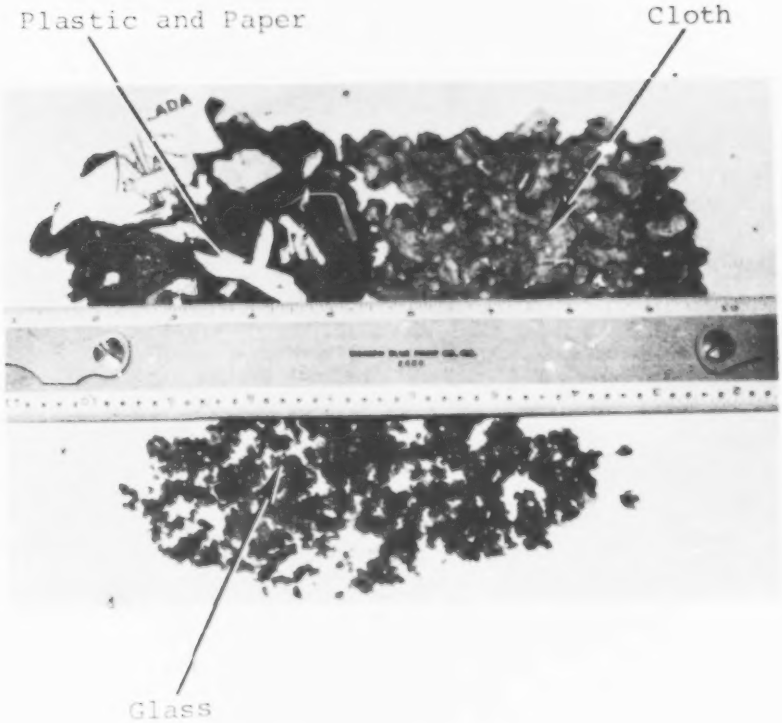

Figure 14. Segregated Grinds from Taylor Stiles Disposer.

Cloth has Been Ground, Drained, Dried, and Fluffed

Figure 15. Cloth and Rags Ground in Taylor Stiles Disposer.

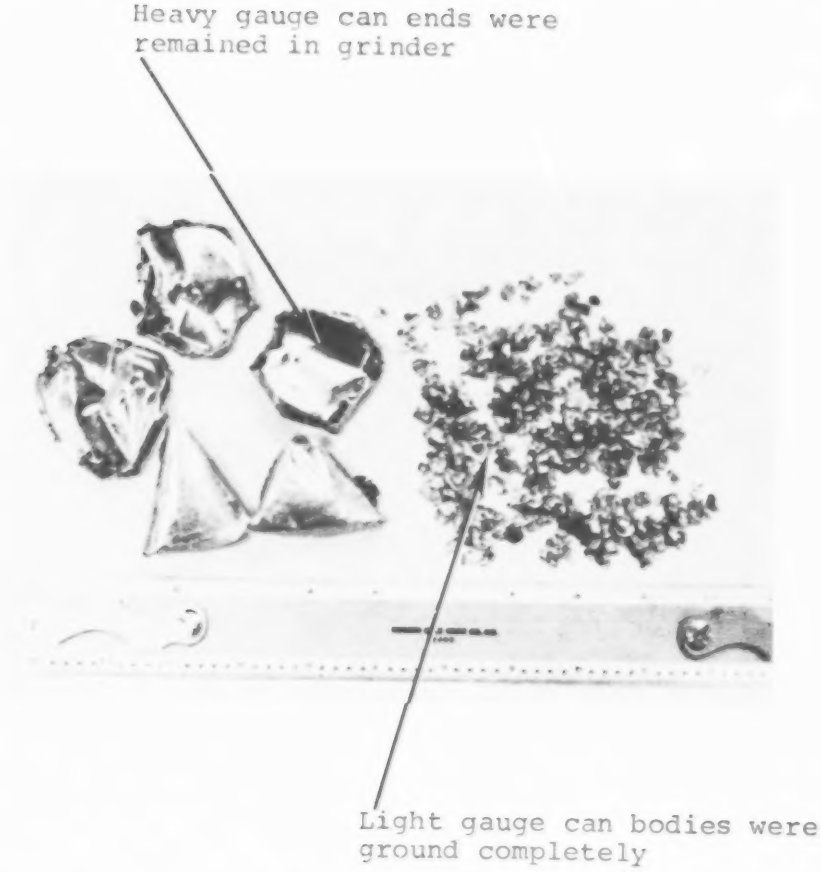

Figure 16. Aluminum Beer Cans Ground in Taylor Stiles Disposer.

Figure 17. Steel and Heavy Plastic Not Grindable in Taylor Stiles Disposer.

glass only or when trying to grind steel cans only. Mixed batches of refuse tended to run for a short time at higher power levels as the heavy glass settled to the bottom of the chamber at the start of the cycle and was quickly ground and discharged. The remainder of the cycle was almost always below the 3 HP level except for occassional current spikes. At no time did the motor appear to become warm, even when grinding 60 pounds of glass in 15 minutes.

Current surges were observed, particularly when grinding glass. However these were reasonable in magnitude and shorter in duration than the normal starting surge for the motor, and consequently acceptable.

Evaluation. These tests indicate that it is feasible to grind most household refuse at power levels compatible with homes having 230 Volt service. The exceptions would be steel cans and pliable plastics such as bleach bottles. The tests also showed that the "ungrindables" tend to simply rattle around and remain in the machine, and although such items probably exact their toll in terms of wear and reduced life, they do not cause breakage or stoppages. This we feel is the prime measure of any grinder's effectiveness for household applications.

Within the limited scope of the test program, it was not possible to determine if a design such as the Taylor-Stiles Disposer could be adequately powered by a 115 volt service and still be within the amperage capability of existing

household circuits. Such an installation would probably be limited to 2 HP, which at full load would draw 24 amps. Starting currents and power surges would, of course, be much higher and, the circuit would have to be protected with a 70 amp time-limit type circuit breaker. To provide such power most existing 115 VAC homes would require an increase in total serivce, and if an increase is made in total service then 230 VAC would be preferable. A 2 HP motor at 230 VAC would draw 12 amps at full load and be protected with a 30 amp circuit breaker.

A recurring conclusion in all of the grinding tests reported here is that steel cans may be beyond the capability of available household power, whether it be 115 or 230 volts. If this is in fact true, then steel cans would have to be separated from the general refuse and collected with the bulky junk that cannot be processed by any home grinder. Such items would include whole appliances, large metal toys, rugs, etc., and would be collected in the conventional manner on a much less frequent schedule than present. Sorting of the cans could be the done by the grinder as they remain in the grinding chamber without causing jams, as was found with the Taylor-Stiles Disposer.

CHAPTER 6

PRELIMINARY DESIGN OF HOUSEHOLD REFUSE GRINDER

System Description

A household refuse grinder installation in a typical single family dwelling is shown schematically in Figure 18. It consists of the grinder located most conveniently in the basement, an internal water storage tank to store the non-fecal water produced in the household, plumbing to separate the non-fecal water and transfer it into the storage tank, a pump to supply the water at a predetermined rate to the grinder for grinding and forming a slurry of the required solids concentration and the necessary plumbing for transferring the slurry to the sewer.

The system is designed to operate on a batch basis and is capable of grinding the average daily production of household refuse. The storage tank is sized to collect the quantity of non-fecal water required to produce the specified ground refuse slurry concentration with a full load of household refuse to be ground. Design specifications of such a typical household refuse grinding system are tabulated in Table 7.

In a typical operation of the system, the householder would collect all the trash and garbage produced in the whole house on a daily basis, and throw it into the hopper of the grinder. He would then check that the storage tank contained an adequate supply of water for the quantity of refuse in the grinder, set a simple dial to an appropriate load setting,

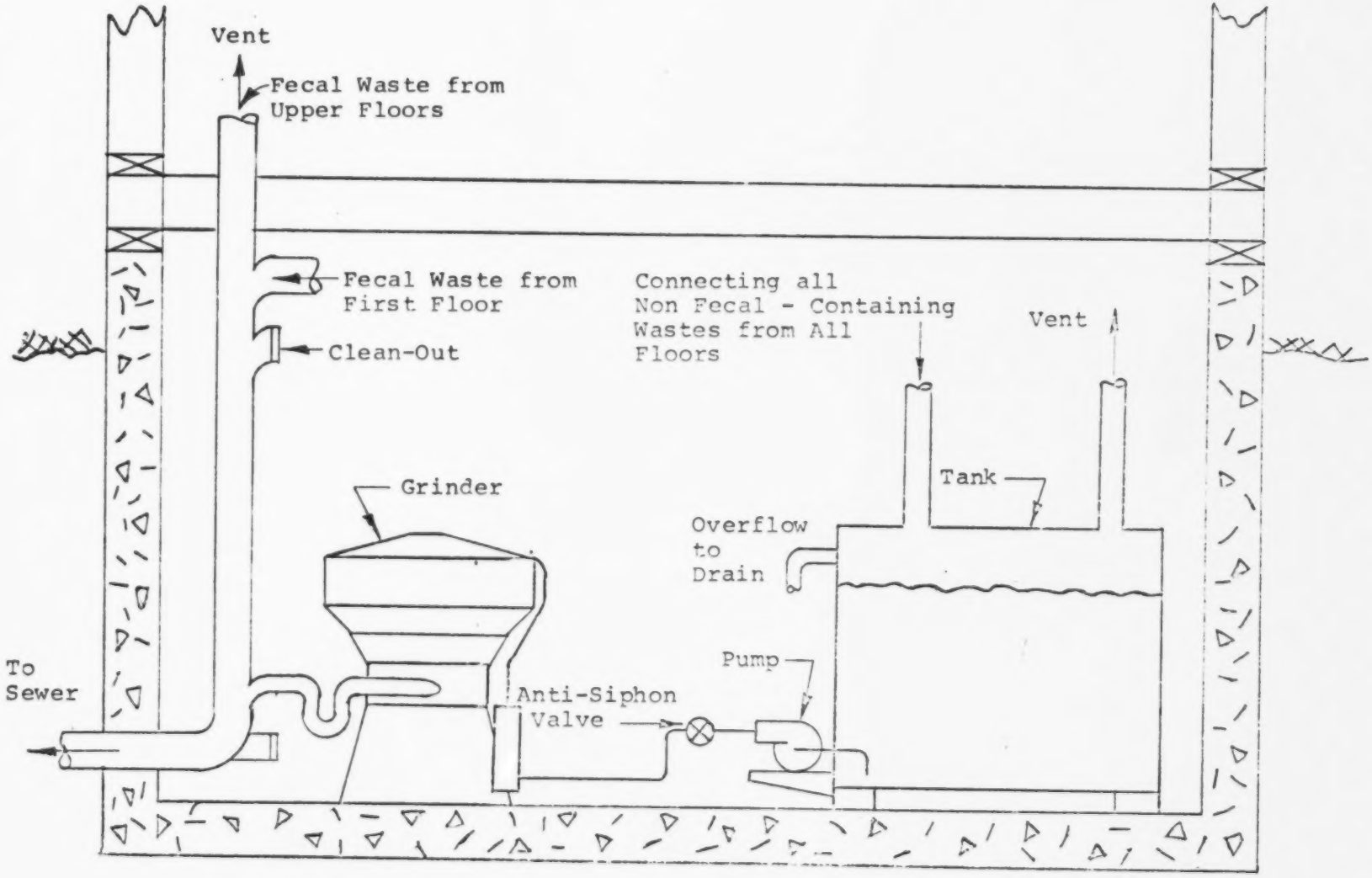

Figure 18 Typical Grinder System Configuration, Basement Installtion.

TABLE 7

SPECIFICATIONS OF A PROPOSED HOUSEHOLD REFUSE GRINDING SYSTEM

Performance Characteristics	
Will grind	Most household refuse including cardboard, paper, cloth, books, plastic, wood, glass bottles and light aluminum
Will not grind	Heavy aluminum, steel cans and some heavy flexible plastics. Will clean and crumple most metal cans.
Jam and damage sensitivity	Will accept ungrindables without a damage or jam hazard.
Capacity	20 gallon capacity corresponds to approximately 12 pounds of refuse depending on composition.
Cycle time	12 minutes for full load.
Slurry concentration	1 percent for normal operation 2 percent with reduced water availability
Particle size	Pulp to 1/4 inch diameter
Grinder Design Specifications	
Size	24" square base, 40" height

TABLE 7 (Cont.)

Capacity	26" square pyrimidal hopper 20 gallon trash capacity
Weight	Approximately 300 pounds
Drive	2 HP 3600 RPM Induction Motor, Direct Drive
Electrical	230 volt single phase AC 30 amp time limit overload
Plumbing	Water Inlet 1/2" or 3/4" FPT Drain Outlet 3" DWV
Controls	Water gauge, locking handle, cycle timer, start/stop control
Safetys	Tamper proof covers, interlocked lid, flushing cycle, low water shutoff, drain blockage sensor, jam overload safety, malfunction light, vibration and sound isolation

Water Storage and Delivery Specifications

Tank	300 gallon capacity fiberglass tank with multiple service connections and overflow provision
Pump	1/3 HP 3450 RPM direct drive providing 12 gpm at 20 psi
Electrical	115 volt single phase AC

TABLE 7 (Cont.)

Plumbing	Water outlet 1/2" or 3/4" FPT
Valves	Manual drain valve, solenoid anti-siphon valve
Controls	Transmitter unit for water gauge and low water shutoff

much like a clothes washer, close the lid and turn a handle to lock the lid and turn the system on. This would start the pump and the grinder, reducing the refuse to a slurry, which flows out to the sewer line under gravity.

Acceptability of the refuse grinding system by the average householder has been a prime considerations. Accordingly the proposed design concept parallels to a large extent the design philosophy utilized in most household electrical appliances, such as clothes washers, dish washers and garbage disposals. The actual design philosophy guiding the selection of the grinding mechanism has been described in the previous chapters. Details of the preliminary design of the grinder, water supply, storage, safety controls, operating sequence and overall system installation are provided in the following sections. Preliminary cost estimates of the various units and the overall system are to be found in the following chapter.

Grinder Design

An artists' conception of the overall grinder configuration is shown in Figure 19. Simplicity of design, jam free operation, maximum power limited by available electrical household service, and low cost were the principal factors governing the design. The preliminary design was conceived to parallel the industrial design guidelines of most household electrical appliances in order to encourage user acceptability.

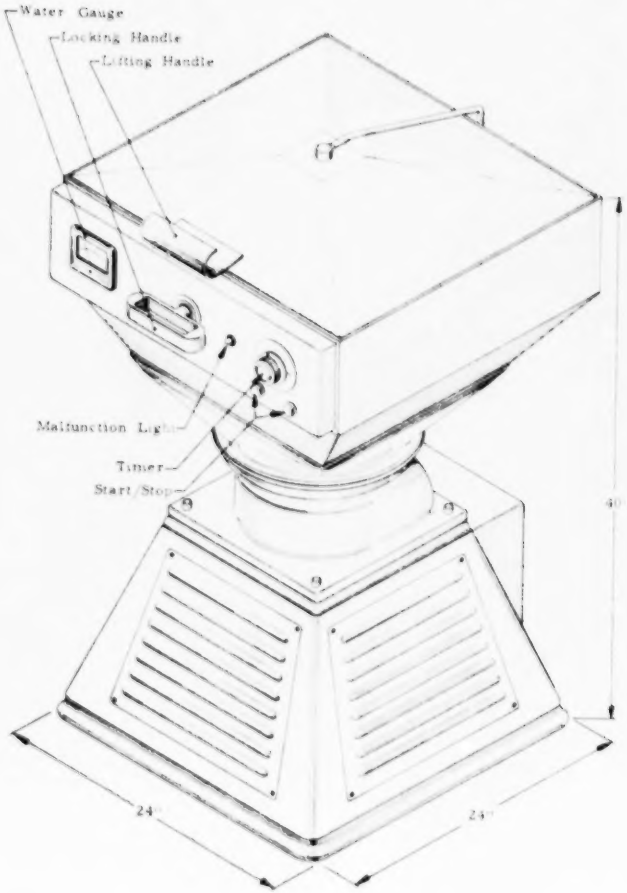

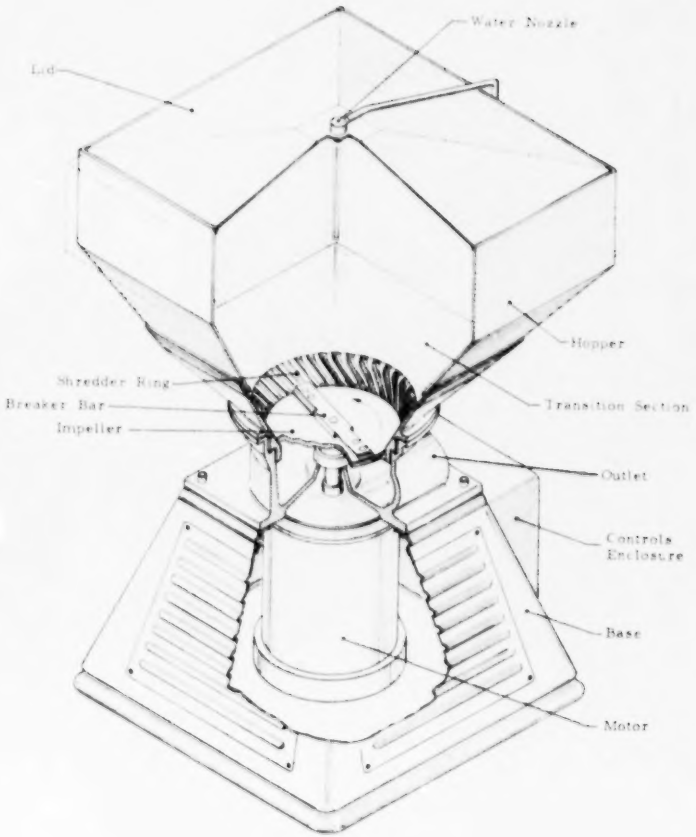

Figure 19. Preliminary Household Grinder Design

Grinding Mechanism. The grinding mechanism selected is a high speed, high clearance shear with no meshing parts. The actual grinding is accomplished in a chamber similar to the Taylor-Stiles Disposer described in Chapter 5.

The impeller and breaker bar are integrally attached, and are direct driven by a 2 HP, 230 volt single phase motor. Both the impeller and the breaker bar are made of hardened steel, and the breaker bar is symmetrical so that it may be inverted, exposing the previously trailing edge and doubling the life of the bar.

The shredder ring in which the impeller rotates is also made of hardened steel with as-cast slots facing the impeller. These slots are approximately 1/2 inch wide and 1/4 inch deep and are canted forward from the vertical away from the advancing breaker bar. The front face of the breaker bar is slanted in a backward direction as shown in Figure 20.

This design configuration provides a more efficient, scissors-like shearing action between the shredder ring and the breaker bar, rather than the less efficient, flat line shear obtained with vertical slots. This is expected to minimize the power consumption and allow the use of a 2 HP motor, considered to be the maximum desirable with normal household service. Further, the large included angle, 60 degrees or more, between the hardened bar and ring would tend to reject upwards any hard items too difficult to shear, thus, reducing the possibility of jams.

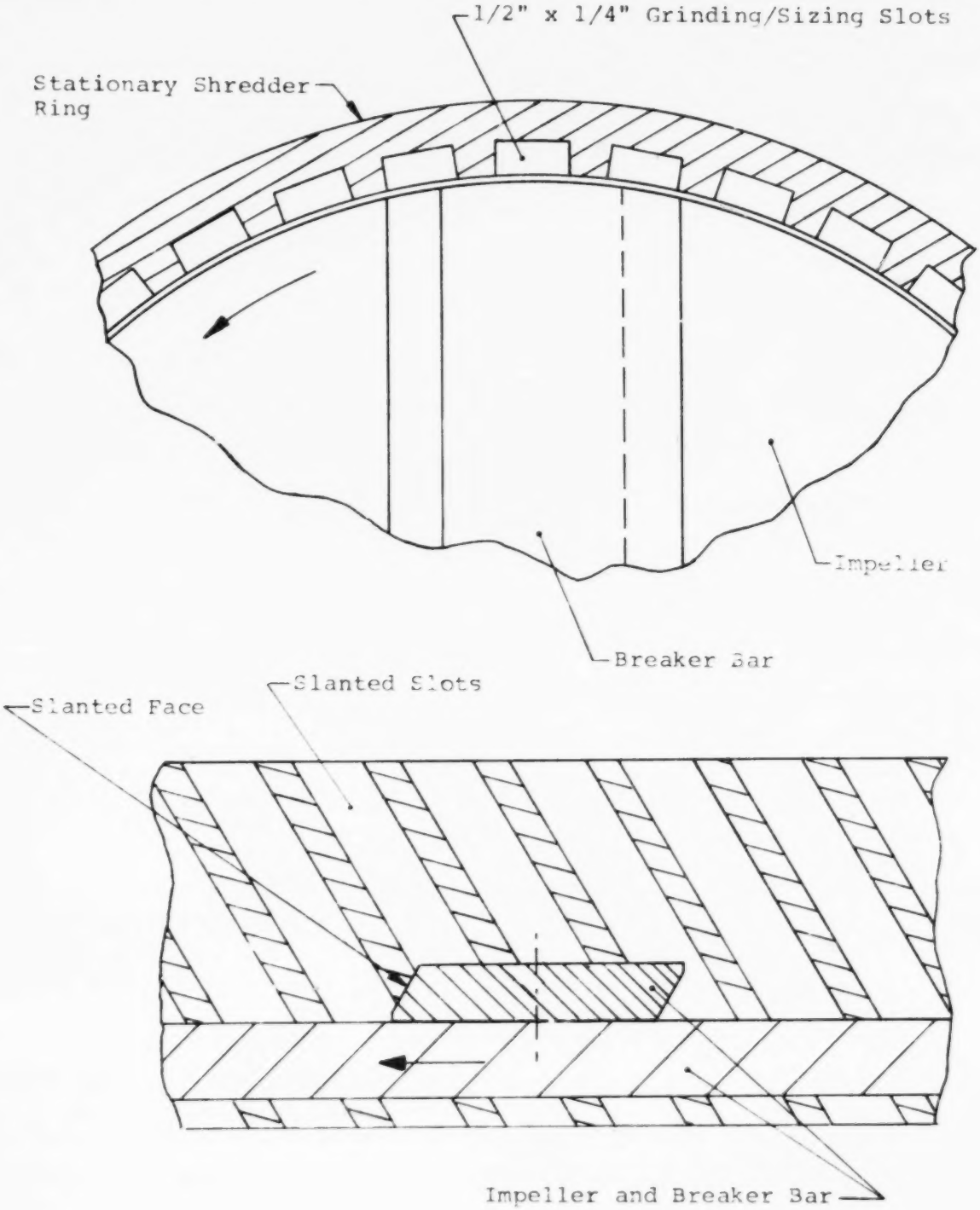

Figure 20 . Shredder Ring/Breaker Bar Interface.

Pulping Chamber. As the whole floor of the grinding chamber forms the impeller, the whole chamber acts as a pulper. This provides the impact and thrashing needed to break the brittle components and pulp the fibrous factions. The shredder ring is retained in the main housing by a gasketed transition section between the round grinding chamber and the square hopper. It is in this transition section that most of the pulping takes place. Accordingly, to provide some measure of noise reduction and to allow for long life, this piece is made of cast iron.

Refuse Hopper. Attached to the transition section is a square pyramidal hopper made of stainless steel or aluminum. The hopper is approximately 26 inches square and 40 inches above the floor at its top rim. This hopper volume is adequate to hold a fully loaded 20 gallon plastic trash can liner with the hopper lid closed. Both the hopper and its lid are coated on the outside and/or inside with a sound absorbing material. The lid of the hopper is slightly dome shaped for stiffness, and is hinged at the rear and spring balanced or detented when open.

Water is delivered to the center of the lid, where a deflector nozzle sprays the water radially outward over the entire underside of the lid. This enables the water to flush and clean the entire hopper as it runs from the lid to the walls of the hopper and down to the bottom of the grinding chamber. The lid fits inside the hopper walls to ensure proper flushing action.

On the front face of the hopper are mounted all of the operator controls including a lifting handle on the lid and a dishwasher-like locking handle for securing the lid in the closed position.

Main Grinder Housing. This portion of the grinder is an iron casting. Its upper perimeter contains piloted recesses for the shredder ring and the bolted-on transition section. The center portion of the floor of the housing is built up to provide room for an external outboard bearing and seal on the motor shaft. The motor is D-flange mounted on the under side of the housing and is splined to the impeller. Refuse grinds entering the housing under the impeller are flushed by gravity through the tangential outlet in the rear of the housing. The under side of the impeller contains several integrally cast vanes which provide a centrifugal pumping action in the event the housing fills with water.

Grinder Base. The main housing is bolted to a steel sheet metal pedestal in the shape of a square pyramid. The wide base provides good stability and allows the grinder to be supported on an elastomer vibration isolation pad. Access panels on the base can be louvered for motor ventilation if required, and are removeable to allow servicing or replacement of the motor and other components. The base is recessed in the back to accept an electrical enclosure containing all of the logic, controls, and service connections to the grinder.

Operator Controls. It is expected that there will be

only two controls, aside from the locking handle, that will require manipulation on the part of the operator. These are the timer control and the stop-start pushbuttons. Other items on the front of the hopper include a water gauge and a malfunction light.

Water Gauge. This is a gas-gauge-like meter connected to a pressure or depth sensing device in the remote water storage tank. It is graduated in the same units as the timer, whether that be minutes, or fractions of a cycle. The gauge indicates the amount of water in the tank and hence the maximum duration of the grinding cycle. Fraction graduations, such as E-1/4-1/2-3/4-F would preferably be placed on both the gauge and timer. The values shown by these indicators tell the operator how full the tank is and the corresponding level to which the hopper can be filled and still allow completion of the grinding cycle with the available water.

Timer Control. The duration of the grinding cycle, as set by the timer control, would be graduated in fractions of the full load cycle time. A typical full load grinding cycle would be approximately 12 minutes. The duration of the grinding cycle would be consistent with the total water capacity of the tank and the pump flow rate, so as to ensure adequate and continuous water flow during the grinding operation. The fractional graduations in cycle time would correspond to the fractional markings in water capacity.

Stop-Start Pushbuttons. The operator starts the machine

after setting the timer, and may stop the machine prematurely if he so desires, perhaps to add some last minute refuse.

Malfunction Light. Should the impeller jam, the motor overload would shut the grinder off and the malfunction light would be energized. A blockage in the drain line would also constitute a malfunction and cause the light to be energized.

Locking Handle. After the hopper lid is closed the dishwasher style locking handle must be engaged, locking the lid for the duration of the cycle.

Pump Flow Rate and Tank Capacity

The pump flow rate and the tank capacity are determined by the size of a full load of refuse and the mean slurry concentration specified. Grinding a typical full load of 12 pounds of refuse into a preferred slurry concentration of 1 percent by weight requires a total water capacity of 1200 pounds or approximately 150 gallons. This 150 gallons represents the minimum tank size. However, additional storage capacity is considered essential. For example, it may be desirable to run two cycles in succession without having to wait for the tank to be replenished by water consumption elsewhere in the house. Since periods of high water consumption probably do not immediately preceed the normally convenient time for grinding refuse, additional capacity is needed to ensure that interim waste water is not lost via the tank overflow.

Thus a minimum tank size of approximately 300 gallons (or one equivalent to the familiar 275 gallon oil tank used in oil-heated homes) is recommended.

The pump flow rate is based on the average time required for grinding a full load of refuse. Based on refuse grinding tests conducted on the Taylor-Stiles Disposer a full load cycle time of 12 minutes is considered reasonable. Thus, a pump flow rate of approximately 12 gallons per minute would be required. A 1/3 HP direct driven centrifugal pump would be capable of providing this flow rate at a supply pressure of 20 psi.

Forming and Discharging the Slurry

Grinding tests conducted at the Foster-Miller laboratories have shown that heavy brittle materials like glass are ground more quickly than most of the other components of refuse, primarily because they sink to the bottom of the refuse chamber. This means that glass will be flushed from the grinder relatively early in the cycle to be followed by most of the flushing water. This is considered to be a desirable feature, since heavy materials require higher scouring velocities in the sewer and tend to move "to the rear of the flow" in a batch-flush situation.

As a further aid to transporting solids ground near the end of the cycle, the flushing water will be continued for approximately a minute after the grinding has stopped. This

extra ten gallons effectively rinses down the lid and walls of the hopper so that no pulp, glass, or other refuse is exposed to the homeowner when the hopper is opened for the next batch. Ungrindables remaining in the hopper at the end of the cycle are also rinsed clean.

A low level sensor is provided in the tank which is arranged to stop the grinder before the water is completely consumed, and to continue the flow of flushing water for one additional minute. This action would only occur if the homeowner set the cycle timer at a value higher than the available water in the tank.

Safety Provisions and Interlocks

Safety is considered to be of utmost importance in such a high speed, high powered consumer appliance. A number of safety interlocks are provided to protect both the operator and his house. The safety features are outlined here without identifying specifically recommended methods for implementation.

Electrical Safety. All electrical service connections, controls and interlocks wiring should be made relatively inaccessable to the tampering homeowner. The controls enclosure is waterproof and its cover is interlocked to prevent operation when removed. The pedestal base is shaped to prevent splashing or spilled water from entering the motor area. Similar precautions have been observed at the pump on the water tank.

Safety Locks for Starting Grinder. Safety in starting the grinder has been incorporated into the design by ensuring that two events have to occur sequentially before the grinder can be started: the lid must be closed, and then the locking handle must be engaged. The grinder may then be started if there is water above the low-level sensor in the tank.

When the grinder is started the locking handle is internally bolted (locked) and cannot be disengaged until the grinder is stopped. After the grinder is stopped, whether it be automatically at the cycle's end or manually by the operator, a time delay is initiated to allow the impeller to stop rotating and the water spray to settle. At the conclusion of this delay, the locking handle is automatically unbolted and can then be disengaged by the operator to open the lid.

A further precaution which could be incorporated into the locking handle is a key lock, primarily to prevent unauthorized use by children. Although it is not possible for a child to lock himself inside the grinder, it is possible for two children to cooperate on such an endeavor or for one child to do away with the family pet.

Low Water Safety. Should the operator select a cycle requiring more water than is available in the tank, the low level sensor in the tank will stop the grinder when only a portion of the cycle is complete and immediately shift the grinder to the flushing portion of the cycle. Water flow

then continues for an additional minute to aid in transporting the refuse already introduced into the sewer and to rinse the walls of the hopper.

Impeller Jams. Should the impeller become jammed by the interference of a hard solid object, a circuit breaker type overload detector will stop the motor. The reset button for this overload detector would probably be located on the cover of the controls enclosure at the rear of the grinder. Clearing the jam requires opening the hopper and removing the object with the refuse tongs provided as an accessory with the machine, after which the lid can be closed and the grinder restarted.

Hydraulic Stoppages. Two provisions are made to protect against stoppages in the drain line. The under side of the impeller contains several pumping vanes which serve no purpose as long as the flushing water drains out of the grinder by gravity in the normal manner. Should a downstream stoppage occur, the grinder housing under the impeller will fill with water. The impeller then acts as a centrifugal pump, pressurizing the drain line and dislodging the jam. If this action is not sufficient, the hopper will begin to fill with water, but should not leak since the housing, transition, and hopper are all provided with sealed joints.

As the water level rises a pressure sensor in the base of the grinder housing is actuated which stops the grinder and pump, preventing an overflow, and energizing the

malfunction indicator on the front panel of the grinder. As the water level subsides, the grinder does not automatically restart itself but may be restarted by the operator. If a second attempt at clearing by impeller pumping is unsuccessful, the drain line must be cleared using a plumbers snake. This would be introduced into the drain line downstream of the grinder at a point high enough to be above the submerged grinding chamber.

In addition, to guard against a failure of the pressure sensor in the base of the grinder housing, the hopper could be fitted with an overflow tube leading directly to the drain. Since it is not known how far downstream the blockage may occur, however, this solution may be of little value. Laboratory tests of the Taylor-Stiles Disposer showed that substantial pumping could be obtained with the impeller, even though it was not designed to act as a pump. This is probably the most effective and reliable method of clearing slurry blockages in the drain line.

Mechanical Safety. The grinder should be designed to be inherently safe. Extra strong castings have been selected where possible and generous safety factors are included to allow for long life under high impact and abrasive conditions. Hinges, handles and interlocks have been designed to be sturdy, vibration resistant, and tamperproof. The motor may or may not be lubricated for life, but it is provided with a third bearing and a high quality shaft seal in the grinder housing.

And finally, the use of cast iron in the grinding section and soundproof coatings on the hopper and lid should enable the grinder to function at an acceptable noise level. Mixed refuse tests using the cast iron Taylor-Stiles Disposer with no soundproofing led to the observation that it was slightly more noisy than a typical kitchen dishwasher.

Operating Sequence

A typical operating sequence to be followed by the homeowner in grinding and disposing his refuse is estimated to be as follows:

(1) Water Storage - Water storage is automatic since the appropriate house drains are connected directly to the tank. If the tank is full, waste water is simply diverted through an overflow drain directly to the sewer.

(2) Open The Grinder - This is done by disengaging the locking handle and lifting the hopper lid.

(3) Empty The Grinder - With a pair of tongs provided with the grinder, the homeowner removes any "ungrindables" remaining from the previous cycle. This would include steel cans, scrap metal too heavy to grind, and probably some heavy tough plastic. These items would be placed in a trash can adjacent to the grinder and be collected monthly (or less often) by streetside collection

along with other bulky junk such as furniture, refrigerators, tires, and the like. Having been through the grinding cycle these "ungrindables" would not only be clean, but also somewhat compacted. Experience may show that the plastic items could be left in the grinder, to be eventually consumed by subsequent cycles.

(4) Load The Grinder - The homeowner places the batch of refuse in the grinder, closes the lid, and engages the dishwasher style lock handle.

(5) Set The Timer - The operator then sets the timer to the appropriate cycle duration, e.g. "1/2" for a half load, or "F" for a full hopper load. This is analogous to setting the familiar water level control on a clothes washer. A glance at the water gauge on the front of the grinder will tell the operator if there is enough water for the cycle he has selected. If there is not adequate water he will probably postpone the grinding till a later time when the tank has collected more waste water from the house drains. Or alternatively he reduces the size of his load.

(6) Start The Grinder - The homeowner starts the machine and leaves it to grind the refuse. The pump at the water tank immediately starts delivering water to the grinder with the deflector in the center

of the hopper lid spraying all of the water on the underside of the lid where it runs down the walls of the hopper and flushes away the grinds as they are formed.

(7) End of Cycle - At the conclusion of the timed cycle the grinder stops and the pump continues to deliver water for another minute or so to rinse down the walls of the hopper.

System Installation

The preliminary grinder design developed in this program is restricted to single family dwellings. A number of different configurations are possible, which may have varying effects on the overall system installation and cost. For example, single and two story houses; slab and basement construction; existing and new construction. This range covers the vast majority of single family dwellings.

A typical house where such a system may be installed would be an existing two story building with two baths, a dishwasher and a basement with a clothes washer. The existing sewer pipe would exit from the basement at a point low enough to allow gravity drainage from sinks and other fixtures located in the basement.

For noise and appearance reasons, the grinder and water storage tank are assumed to be in the basement where possible.

Slab type constructions will have the grinder in a laundry or utility room, and the water storage tank will be buried outdoors. The water tank will be located remotely from the grinder, and will be fitted with a centrifugal pump to deliver water to the grinder. Outdoor water tanks will probably be made of concrete and will be pumped from inside the house.

The drain plumbing would require modifications to separate and store the non-fecal water only. Lavatories, tubs, showers, clothes washers and dishwashers would have their drains separated and diverted to the vented storage tank. All other fixtures would remain plumbed in the original manner. Estimates of such house modification costs are to be found in the next chapter.

CHAPTER 7

GRINDER AND SYSTEM COST ESTIMATES

Cost estimates are provided for the basic grinder, water storage tank and delivery, house modifications and installation. Cost estimates for the grinder were prepared for two production quantities One, a total one-time volume of 500 units for a typical demonstration project, and two, a high mass production rate of greater than 20,000 units per year. The installation and house modification costs were estimated for sixteen different configurations to account for the different house types and the use of copper or PVC piping.

Cost Estimate for Grinder, Water Storage, Delivery and Unit Installation

Table 8 shows a break up of the estimated manufacturing costs for the two production quantities. These cost estimates are for the 2 horsepower, 230 V AC, single phase grinder design described in the previous chapter. The grinder is capable of macerating most of the refuse components except steel and heavy gauge aluminum cans.

The water storage tank is approximately 300 gallons in capacity, is made of fiberglass, and is fitted with a 1/3 horsepower centrifugal pump. The fiberglass tank is for indoor installation. An outdoor concrete tank, buried underground,

TABLE 8

ESTIMATED MANUFACTURERS COST OF PROPOSED REFUSE GRINDER SYSTEM

	500 Units Total	20,000 Units Per Year
Basic Grinder, complete with:	$ 592	$ 180
Base, motor, grinder section, hopper and lid, electrical controls and starter, safety devices, sound attenuation, tooling, and assembly		
Water Storage System, complete with:	275	116
Tank, pump and motor, level switch and gauge, manual and automatic valves, overflow provision, vent, service conections, and assembly		
Installation*	200	150
Total Manufacturers Cost	1067	446
Selling Price** (cost x 1.75)		780

* Does not include possible increase in electrical service.

** Add $250 for outdoor tank (slab construction).

is estimated to cost an additional $250 to account for burial of the tank and feed-through of the necessary piping into the house.

The manufacturer's cost of the grinder and tank for the two production quantities is estimated to be 1067 and 446 dollars. The selling price of the production unit, taking into account distribution and sales costs, is estimated to be 1.75 times the manufactured cost. On this basis, the production unit is estimated to sell at a price of 780 dollars.

Cost Estimate for House Modification

Four basic parameters were considered for the typical one family dwelling, giving rise to sixteen possible combinations. These parameters are: single and two story houses, basement and slab construction, copper and PVC piping, and existing versus new construction.

Table 9 presents a cost breakdown for the sixteen categories. These costs are based on the following assumptions:

1. Each house is considered to have two full baths, each complete with lavatory, bathtub or stall shower, and toilet.
2. The kitchen in each house has one sink and one dishwasher.

TABLE 9

ESTIMATED HOUSE MODIFICATION COSTS FOR A TYPICAL PROPOSED RESIDENTIAL REFUSE GRINDING SYSTEM

Type of House Construction	$ Cost Using Copper Pipe	$ Cost Using PVC Pipe
New two story slab type	494.00	275.00
New two story basement type	432.00	215.00
New one story slab type	397.00	233.00
New one story basement type	337.00	173.00
Existing two story slab type	1211.00	1057.00
Existing two story basement type	799.00	645.00
Existing one story slab type	1085.00	935.00
Existing one story basement type	673.00	523.00

3. The state of Connecticut sanitary code is used as the basis for pipe sizing.

4. Existing house plumbing alteration costs include cost for complete restoration of disturbed walls and floors including patching of tile floors and walls as required.

5. Work is performed by complementary craft teams trained and experienced in a variety of construction styles.

6. Work is planned, dispatched, supervised, and equipped with tools, equipment, and materials so as to minimize unapplied labor.

7. New waste system venting is connected to the existing vent where feasible in three out of four connections.

8. Plumbing materials and supplies are wholesale quantity lot purchases.

9. Holes required for vents and vent pipe installation in existing houses are performed with power drilling equipment using extension sections to go through ceiling and floor plates.

10. Replacement materials required for existing houses are assumed to be standard readily available with no associated premium.

11. A contingency factor of 1.2 times the labor rate is

incorporated for existing house installations to account for job difficulties.

12. Licensed trade labor rates are based on prevailing Connecticut and New York rates.
13. Unlicensed trade labor rates are based upon those prevailing in the Connecticut area.
14. New house systems are assumed to be planned for and installed as part of the overall sanitary waste system.
15. Comparison of copper and PVC pipe is presented because PVC is becoming widely accepted and has labor and material cost savings over copper.

On this basis, it is seen that the cost of house modification to accept the household refuse grinder system is estimated to lie in the 200 to 500 dollar range for new construction and 500 to 1200 dollars for existing homes.

Maintenance Costs

Replacement of the shredder ring and the breaker bar are expected to be the two major maintenance cost items. Such replacement may have to take place every few years. Other maintenance costs would be associated with the normal repair of such electromechanical home appliances. An annual maintenance cost of $20 dollars per year appears to be reasonable.

Cost Summary

Table 10 is a summary of all cost figures and shows both the total installed system price (to the homeowner) and the corresponding annual cost assuming a 15 year life for the grinder and pump and a 30 year life for all other items. The annual cost of this sytem is higher than the present day estimate of $50 to $70 per year for home trash collection. However these are only apparent costs which do not represent the total system costs involved nor do they quantify the social benefits to be obtained from the implementation of this concept. An economic evaluation of this overall system is presently under progress at Curran Associates, Northampton, Mass. under a separate EPA contract. Any conclusions on the economic viability of this concept should be deferred pending the availability of the results of this economic evaluation.

TABLE 10

ESTIMATED INSTALLED SYSTEM PRICE AND ANNUAL COST

	System Price* $	Annual Cost $
New two story slab copper pipe	1524	90.60
New two story slab PVC pipe	1305	83.30
New two story basement copper pipe	1212	80.20
New two story basement PVC pipe	995	73.00
New one story slab copper pipe	1427	87.30
New one story slab PVC pipe	1263	81.90
New one story basement copper pipe	1117	77.00
New one story basement PVC pipe	953	71.60
Existing two story slab copper pipe	2241	114.50
Existing two story slab PVC pipe	2087	109.30
Existing two story basement copper pipe	1579	92.40
Existing two story basement PVC pipe	1425	87.30
Existing one story slab copper pipe	2115	110.30
Existing one story slab PVC pipe	1965	105.20
Existing one story basement copper pipe	1453	88.20
Existing one story basement PVC pipe	1303	83.20

* Does not include possible increase in electrical service.

CHAPTER 8

ALTERNATE HOUSEHOLD CONFIGURATIONS AND GRINDER DESIGNS

This chapter describes two alternate designs, a packaged household system of the grinder design developed in this program and a more universal but more power intensive grinder design potentially capable of grinding more of the domestic refuse, including steel cans. Grinding of steel cans was not considered to be an essential requirement under the contract specifications, however, a grinder capable of grinding steel cans increases the utility of the grinder and eliminates the need for periodic pickup or disposal of the ungrindables. At the same time, there may be economic benefits to be achieved by not grinding the steel cans, but separating them for direct delivery to recycle centers. These economic trade offs need to be considered before a final evaluation can be made.

Packaged Installation

A "package system" of the design developed in Chapter 6 is shown schematically in Figure 21. The system is particularly suitable for outdoor installation with houses having a slab type construction. Such an installation is likely to occur in warmer regions of the country where outdoor installation is not a disadvantage.

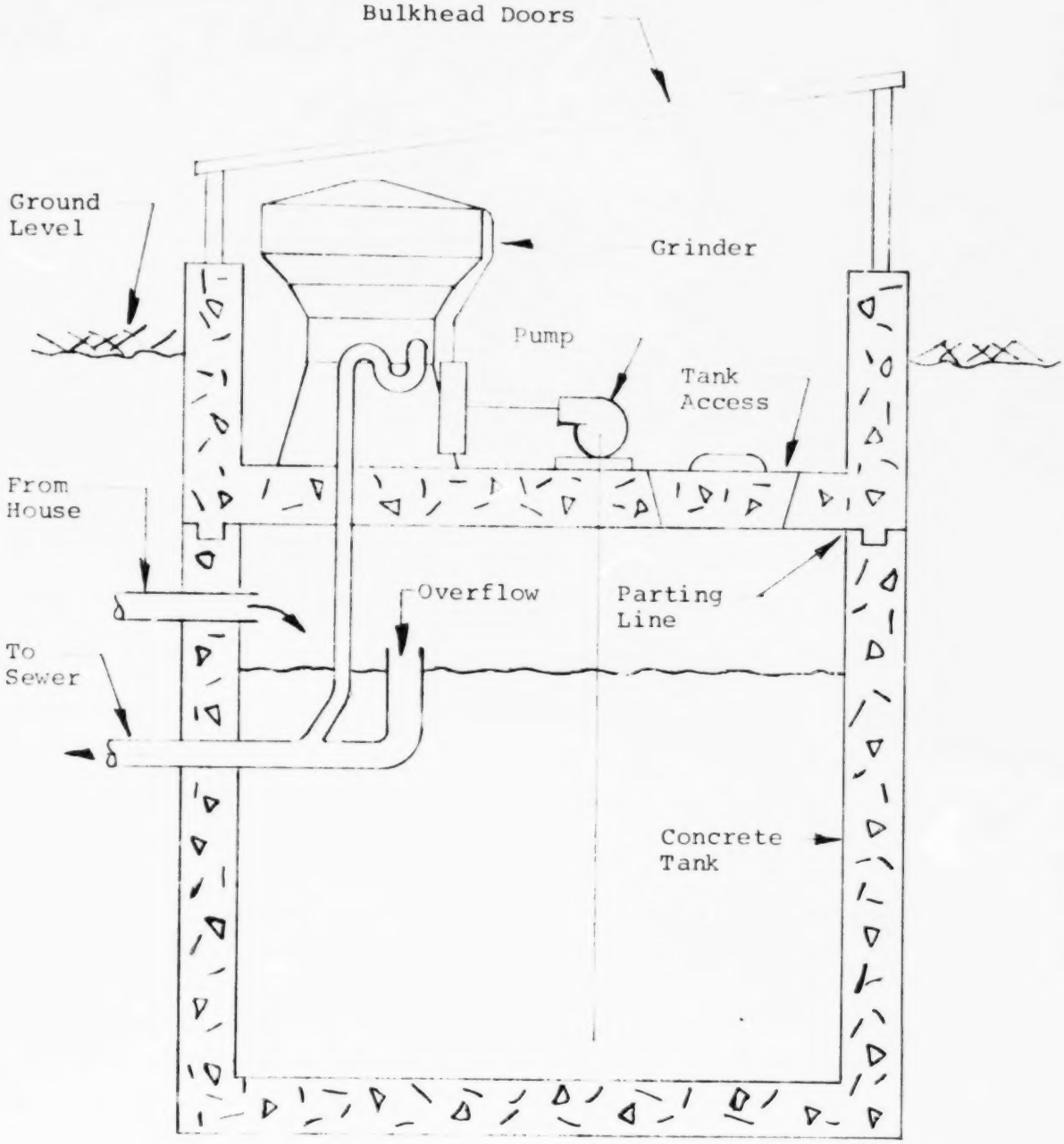

Figure 21. Outdoor "Package System."

In the package system the grinder is mounted on top of a concrete water tank with concrete walls encircling the grinder. The package is then buried, and bulkhead style type doors are added for access to the grinder. Although useable for both old and new construction, the cost savings for such a system would be most significant for existing slab constructions in warm climates. The concrete tank is less expensive than fiberglass, and the ability to pre-assemble and pre-plumb much of the package before shipment are major factors contributing to the cost savings. A detailed cost estimate for this system was not prepared during this program; however an approximate cost saving of 75 to 100 dollars is estimated. Far more substantial savings would result if two and three-family dwellings could share one grinder installation. This appears feasible if all participating units supplied water to the storage tank, particularly in view of the fact that the grinder would see only a few minutes of operation per day in a single family dwelling.

Universal Household Refuse Grinder

The development of the proposed grinder design was primarily dictated by the need for a low cost appliance, the limited electrical service available in most homes (maximum 2 horsepower electric motor) and the stringent requirement for safe, jam free operation. In order to meet these design

criteria, steel cans could not be ground in the proposed design. A higher powered machine would be required.

A concept estimated to have this capability of grinding all refuse is shown schematically in Figure 22. The grinding process employs high clearance shear as in the present design, but with meshing parts such as in the Jones-Beloit Shredmaster and the Dorr-Oliver Gorator. It combines the best features of the proposed grinder, the Jones-Beloit Shredmaster and the Dorr-Oliver Gorator to achieve a universal grinding capability at a moderate power level and cost. Both the Shredmaster and the Gorator are capable of handling steel and aluminum cans, glass, wood, paper, plastics and textiles. However, they both suffer from a high power consumption and high jam sensitivity. Further, the axial geometry of both units limits the size of the throat and makes the designs unsuitable for the feeding of bulky refuse.

The universal grinder design consists of a simple direct drive configuration with one moving part. Batch loading into a hopper and continuous liquid flushing are retained. The impeller, which forms the floor of the chamber carries a breaker bar and is surrounded by a shredder ring with slots or ribs as in the proposed design. The perifery of the impeller is relieved, however, to allow refuse to pass around it after being coarsely ground. Paper will be almost completely pulped and glass will be completely shattered before passing the impeller. Cans will be crumpled (as they are presently)

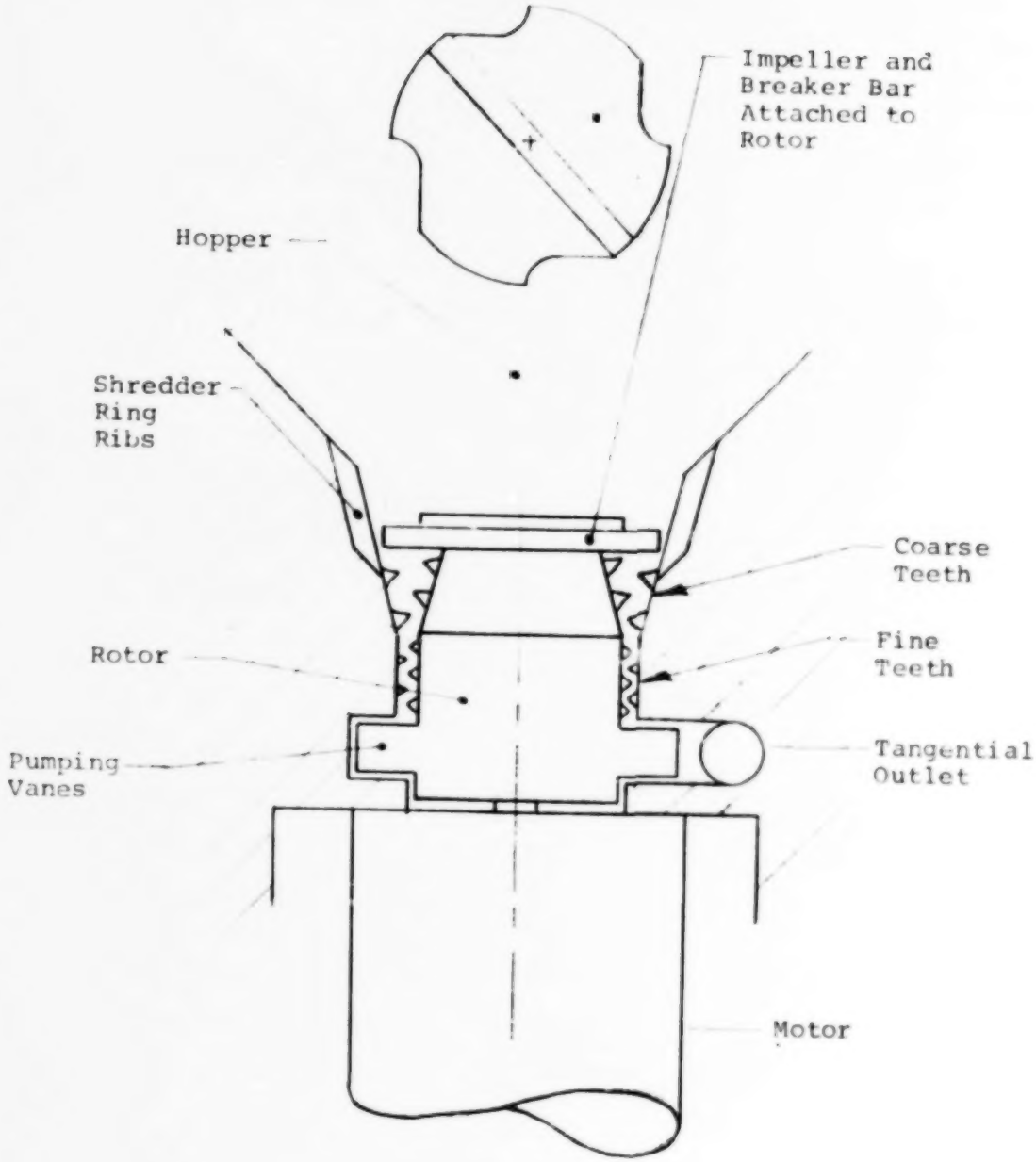

Figure 22. Possible High Power Grinder Design.

and then pass around the impeller. Here the refuse enters the shredder section, which consists of an inner rotor and a fixed outer housing. Each is surfaced with teeth, which mesh as the rotor turns. This arrangement can be likened to the Jones-Beloit Shredmaster disk mill arranged in a cylindrical configuration. Teeth are placed on a spiral centerline on the rotor and on an opposite hand spiral on the housing. As the spiral rows of teeth pass each other the refuse is "pumped" downward. Coarse teeth at the top are about 3/4" in height and fine teeth at the bottom are about 1/4" in height. Jones-Beloit has found this to be an effective sizing for refuse grinding.

Primary size reduction takes place above the rotor (impeller) where there are no meshing parts. This relieves the shredder teeth of the difficult task of grinding glass. Experience has shown that the size of the glass grinds is almost independent of tooth spacing.

Below the shredder section pumping vanes aid in tangentially discharging the grinds and in clearing any downstream drain blockages that may occur.

Our best engineering estimate of power consumption, obtained by comparing this concept with the Dorr-Oliver Gorator, is in the range of 5 to 7 1/2 horsepower. A 5 HP single phase motor at 230 VAC draws 28 amps at full load and would have to be protected with a 70 amp circuit breaker. This rating is considered to be too power intensive for normal

household service but may be suitable for multi-family apartment type applications.

CHAPTER 9

CONCLUSIONS AND RECOMMENDATIONS

Conclusions

The principal result of this program effort has been the development of a preliminary design of a household refuse grinder. Major conclusions drawn from this program are as follows:

1. The most practical grinder design will be capable of grinding most of the components of household refuse such as, paper, cardboard, plastics, cloth, glass, lightweight aluminum and garbage, items which constitute the bulk of household refuse. The grinder will not be capable of grinding heavy aluminum and steel cans.
2. The grinder design will accept the heavy aluminum and steel cans without any danger of damage to the machine. It will clean the cans of any putrescible matter and more than likely crumple them to a smaller volume. Thus the machine would aid the homeowner in preparing the cans for recycling or ultimate disposal.
3. A grinder design capable of grinding all the components of household refuse, including steel cans would be extremely high powered and expensive.

It is estimated that 5-7 1/2 HP would be required to grind steel cans, and this would result in a selling price increase on the order of $300 to $400. Further, the design would be susceptible to jams, breakage and high maintenance costs. The exclusion of steel from grinding and from the subsequent hydraulic transport process would improve the reliability of the proposed system.

4. The exclusion of certain refuse items from grinding, would require periodic pick up or disposal at a landfill site or recycling center.

5. The grinder design is similar in appearance and mode of operation to a major household appliance, such as a washing machine. The operation of the machine is batch type, much like a washing machine. Simplicity in design and a high degree of reliability and trouble free operation are expected to be achieved by exploiting to a maximum the user-machine interaction. A minimum presorting to remove the hard to grind items from the refuse load, filling the machine with water, setting dials and pulling control levers are familiar operations associated with the use of any household appliance. This direct and responsible interaction is expected to eliminate a number of the reliability and maintenance problems which so commonly plague the unattended and remote operation of such machines.

6. The grinder has been designed to accept approximately 12 lbs of refuse (the estimated contents of a 20 gallon trash barrel) and grind it within a total cycle time of approximately 12 minutes. The drive motor has been sized at 2 horsepower which is considered to be the maximum for normal household electric service.

7. The system requires special modifications to the household plumbing to separate and store the non-fecal water. A 300 gallon storage tank is provided. The size of this tank and flow rate through the grinder have been sized to achieve a 1 percent slurry concentration in the flow from the house to the sewer.

8. The available water supply for grinding was estimated on a water consumption of 100 gpcd. Results more recently available[10] indicate that 50 gpcd would be a more realistic value for domestic water consumption feeding into the sewer. (This does not include, for example, garden water usage which does not feed into the sewer). The reduced water availability would increase the slurry concentration in the connector flow to the sewer to approximately 2 percent and to 1 percent in the sewer line. The results of Phase I[3] have shown that a 2 percent slurry concentration would result in a reduction in the capacity of the connector. However, a flow rate of 12 gallons per minute represents

only a small percentage of the interconnector capacity, and should therefore cause no problems. A 1 percent slurry concentration in the sewer line is still acceptable.[3] The concept of using collected rainwater to conserve potable water was considered, but it would not be significantly useful for large parts of the country. Even for residential homes in high rainfall areas the cost of rain collection and the probable increase in required water storage volume (to insure minimal overflow) was not considered justified.

9. The capital cost of the total system includes the grinder cost, the water supply and storage tank cost and the cost for house modifications to separate the fecal and non-fecal water. The cost to the consumer of the grinder and the water supply system is estimated to be 780 dollars in production quantities. The cost of house modifications is a strong function of the type and age of house. It can range from 200 to 500 dollars for new construction and 500 to 1200 dollars for existing homes. The high cost of house modifications, particularly for existing homes, would strongly favor the applicability of the system to new construction.

10. The annual cost of the system, including depreciation and maintenance is estimated to be in the range of 70 to 115 dollars, depending on the type of house

construction. This is high when directly compared with the $50 to $70 annual cost for conventional pick-up. However, the two systems are not equivalent and therefore not comparable. No attempt has been made here to determine the dollar savings that would result from the overall labor reduction of the grinder-sewer transport system, nor has a value been placed on the recoverable or reusable waste. An economic study of the total system is required. Such a study is presently in progress at Curran Associates, Northampton, Mass. under a separate EPA contract. The results of this study should provide a more realistic economic evaluation of the concept of household refuse grinding and transport through sewers.

Recommendations

The logical next step to any preliminary design is a prototype design and development program. We recommend that such a program be undertaken to design, fabricate and test on a laboratory scale the proposed household refuse grinder design. Simplification in design has been achieved on the basis of a responsible relationship between the user and the machine. This design basis needs verification. Larger, multifamily grinder designs, such as presently under

investigation at Curran Associates, would tend to be larger in size, more conventional in design and probably less satisfactory in operation because of a lack of direct user-machine responsibility. Most of the refuse grinding experience available to date has been on large grinding units working on municipal or institintional waste. This has generally been unsatisfactory and has led to an industry belief that a small household refuse grinder is impractical. A laboratory test program to evaluate the performance of the proposed grinder design philosophy is strongly recommended. Such a test program would allow us to investigate the effect of slurry concentration on grinding and transport of the higher contration slurry through the interconnector between the house and the sewer. This could have a valuable input to the question of overall water storage and fresh water supply under consideration by Curran Associates in their on going study.

Subsequent to the demonstration of laboratory prototype performance, evaluation of the technical feasibility of the flow of ground refuse slurry through bends, manholes and sewer appurtenances, and the demonstration of economic feasibility by the Curran Associates study we recommend that the technical feasibility of the overall system be demonstrated in a typical small community, preferably new.

REFERENCES

1. Ad Hoc Group for Office of Science and Technology, Executive Office of the President. Solid Waste Management - A Comprehensive Assessment of Solid Waste Problems, Practices and Needs. Washington, D.C. May 1969.

2. Zandi, I., and J. Hayden. A Pneumo-slurry System of a Collecting and Removing Solid Wastes. In Advances in Solid-Liquid Flow in Pipes and its Application, Zandi, I.; ed. Pergamon Press Inc. Oxford, 1971. p. 237-254.

3. Guzdar, A.R., and S.S. Rhee. Feasibility of Hydraulic Transport and Treatment of Ground Household Refuse. Draft Report of Phase I of Contract No. CPE-70-115 submitted to Solid Waste Research, Office of Research and Monitoring, Environmental Protection Agency, Cincinnati, Ohio., October 1971.

4. Harding, C.I., Recycling and Utilization. In Proceedings; The Surgeon General's Conference on Solid Waste Management for Metropolitan Washington, U.S. Public Health Service, Washington, D.C. Publication No. 1729, 1967. p. 105-120.

5. Nebiker, J.H. and P. Meier. Municipal Sewer for Transport of Domestic Refuse. Paper presented at HYDROTRANSPORT 1, First International Conference on the Hydraulic Transport of Solids in Pipes, University of Warwick, England, September 1-4, 1970. British Hydromechanics Research Association, Cranfield, Bedford, England.

6. County Sanitation Districts of Los Angeles County. Report on a Study of the Feasibility of Disposing of Rubbish into a Sewage Disposal System, 1963. In-house report.

7. Whitly, R. Evaluation of Settling Characteristics of Ground Refuse in Sewage. County Sanitation Districts Los Angeles County, 1965. In-house report.

8. County Sanitation Districts Los Angeles County. Summary Report on the Feasibility of Disposing of Ground Solid Wastes into a Sewage Disposal System and Evaluation of Settling Characteristics in Sewage, 1967. In-house report.

9. Patrick, P.K. Waste Volume Reduction by Pulverization, Crushing, and Shearing. Paper presented at the 69th Annual Conference, The Institute of Public Cleansing, Blackpool, England, June 1967.

10. Bailey, J.R., et al. A Study of Flow Reduction and Treatment of Waste Water from Households. Prepared by General Dynamics, Electric Boat Division, Groton, Conn. for the Federal Water Quality Administration, U.S. Department of the Interior. 1969.

11. "Collection, Reduction and Disposal of Solid Waste in High-Rise Multifamily Dwellings", 2nd Interim Report. Special Advisory Committee on Solid Waste of the Building Research Advisory Board, Division of Engineering-National Research Council, for the EPA.

APPENDIX A

LIST OF MANUFACTURES CONTACTED

American Bowser Company	Aurora, Illinois
American Hoist and Derrick	St. Paul, Minnesota
BIF Sanitrol	Largo, Florida
Bauer Bros. Company	Springfield, Ohio
Beloit-Passavant Company	Janesville, Wisconsin
Black-Clawson Company	Middletown, Ohio
Bradley Pulverizer Company	Allentown, Pennsylvania
CF and I Engineers	Denver, Colorado
Can Tex Div. Harsco	Mineral Wells, Texas
Dorr-Oliver Inc.	Stamford, Connecticut
Eagle Crusher Company	Galion, Ohio
Eidal Int. Corporation	Albuquerque, New Mexico
Engineered Products Company	Clearwater, Florida
Enpo-Cornell Pump Company	Piqua, Ohio
Entoleler, Inc.	New Haven, Connecticut
Franklin Miller Company	East Orange, New Jersey
Gruendler Crusher and Pulverizer Co.	St. Louis, Missouri
Hammermills Inc.	Cedar Rapids, Iowa
Heil Company	Milwaukee, Wisconsin
S. Howes Company	Silver Creek, New York
Jeffery Mfg. Company	Columbus, Ohio
Jones Div. Beloit Corp.	Pittsfield, Massachusetts
Kemp Shredder Company	Erie, Pennsylvania
Link Belt/FMC Corp.	Boston, Massachusetts
Mitts and Merrill Company	Saginaw, Michigan
Penn. Crusher	Broomall, Pennsylvania
Rescor Industries	Moorestown, New Jersey
SFM Mil-Pac Systems Inc.	Mountainside, New Jersey
Schutte Pulverizer Company	Buffalo, New York
Smith Eng. Div. Barber Greene	Milwaukee, Wisconsin

APPENDIX A (Cont.)

Smith and Loveless Div. Ecodyne	Lenexa, Kansas
Somat Corporation	Pomeroy, Pennsylvania
Stedman Foundry and Mach. Company	Aurora, Indiana
Sturtevant Mill Company	Dorchester, Massachusetts
Taylor-Stiles Div. Envirotech	Cleveland, Ohio
Universal Shredder	Saginaw, Michigan
Wascon Systems Inc.	Hatboro, Pennsylvania
Water Polution Control Corp.	Milwaukee, Wisconsin
Williams Patent Crusher and Pulverizer Company	St. Louis, Missouri
Worthington Corporation	Harrison, New Jersey
Young Industries	Muncy, Pennsylvania

ACKNOWLEDGEMENT

This investigation was conducted by the Engineering Studies Division of Foster-Miller Associates under the direction of Mr. Adi R. Guzdar. Mr. Sang S. Rhee and Mr. David Monaghan were the Project Engineers for the program. Mr. Barry Andrews was responsible for the conduct of most of the experimental program. Other members of the staff who made significant contributions to the program are Messrs. Don Higgins, Mr. Phil Palumbo and Mr. Dave Friswell.

This contract was monitored by Mr. James Grant and Mr. Donald A. Oberacker, Project Officers of the Storage, Collection and Transportation Project, Solid Waste Research Laboratory, National Environmental Research Center, Cincinnati, Ohio. Dr. Harry Bostian, of the Advanced Waste Treatment Research Laboratory, NERC, Cincinnati, acted as a joint Project Officer providing valuable inputs to the programs related to water usage, treatment and ultimate disposal.

Thanks go to Tom Sanders for initiating the program.

To Prof. David Wilson of the staff of the Massachusetts Institute of Technology for valuable counsel.

To Mr. J.K. Bajaj of Taylor-Stiles Division of Envirotech Corp., Cleveland, Ohio, for their cooperation in providing the necessary test equipment and advice.